LOT 1 CYPRESS LAKE PHASE 2.
745-1458, 836-2191, PB 1226-1264

HALL LORRAINE/JAMES CAROLYN V
287 SW RIDGEVIEW PL
LAKE CITY, FL 32024

2026

33-3S-16-02434-101

COLUMBIA COUNTY PROPERTY

BUILDING CHARACTERISTICS

ELEMENT	CD	CONSTRUCTION
Exterior Wall	17	MSNRY STUC 100
Roof Structur	03	GABLE/HIP 100
Roof Cover	03	COMP SHNGL 100
Interior Wall	05	DRYWALL 100
Interior Floo	14	CARPET 50
Interior Floo	15	HARDTILE 50
Air Condition	03	CENTRAL 100
Heating Type	04	AIR DUCTED 100
Bedrooms		4 100
Bathrooms		3.5 100
Frame	01	NONE 100
Stories	1.	1. 100
Architectual	05	CONV 100
Units		0 100
Condition Adj	03	03 100
Kitchen Adjus	01	01 100
Quality	05	05
DOR CODE	0100	SINGLE FAMILY
MAP NUM		MKT AREA 06
NEIGHBORHOOD/LOC	33316.020	1.00/

AREA TYPE	TOTAL GROSS AREA	PCT OF BASE	YEAR	TOT ADJ AREA	SUBAREA MARKET VALUE
BAS	4,857	100		4,857	426,413
BAS	264	100	2023	264	23,178
FEP	225	80		180	15,803
FOP	36	30		11	966
FOP	130	30		39	3,424
FSP	156	40		62	5,443
FST	50	55		28	2,458
UOP	24	20	2023	5	439
TOTALS	5,742			5,446	478,124

MARKET ADJUSTMENTS

TYPE	MDL	EFF. AREA	TOT ADJ PTS	EFF. BASE RATE	REPL. COST NEW	AYB	EYB	ECON	FNCT		NORM	% COND
0100	01	5,446	105.9250	118.64	646,113	1999	1999	0	0	0	26.00	74.00

1 SINGLE FAM 0% - 0 Heated Area: 5121 HX Base Yr

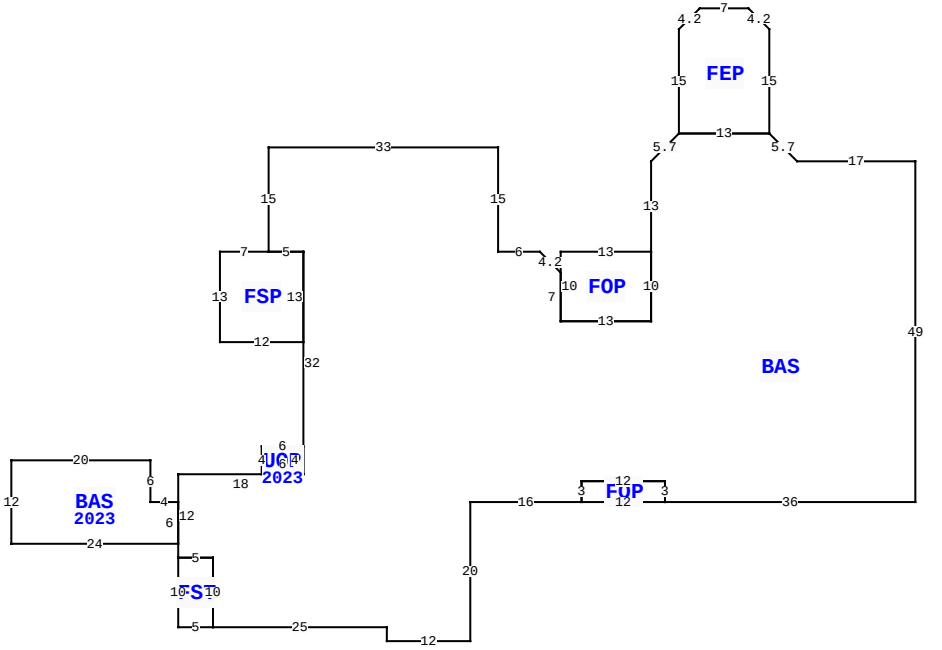

287 SW RIDGEVIEW PL, LAKE CITY

BLD DATE		LGL DATE	
XF DATE		LAND DATE	04/03/2025 MLU
INC DATE		AG DATE	

VALUATION SUMMARY

VALUATION BY	STANDARD
Tax Group: 2	Tax Dist:
BUILDING MARKET VALUE	478,124
TOTAL MARKET OB/XF VALUE	15,028
TOTAL LAND VALUE - MARKET	35,000
TOTAL MARKET VALUE	528,152
SOH/AGL Deduction	0
ASSESSED VALUE	528,152
TOTAL EXEMPTION VALUE	0
BASE TAXABLE VALUE	528,152
TOTAL JUST VALUE	528,152
NCON VALUE	0
INCOME VALUE	
PREVIOUS YEAR MKT VALUE	534,913

LAND:1:1: 1.52 AC.

PERMIT NUM	DESCRIPTION	AMT	ISSUED
18812	ADDN SFR	170	10/09/2001
15378	SFR	560	04/13/2999

SALES DATA

OFF RECORD Number	DATE	TYPE INST	Q U	V I	RSN CD	SALE PRICE
1440/2312	6/25/2021	PB	U	I	18	0
GRANTOR: CLERK OF COURT (ESTAT						
GRANTEE: JAMES CAROLYN V						
1263/2479	10/25/2013	WD	U	I	38	240,000
GRANTOR: JERRY GARRETT (SINGLE						
GRANTEE: CHARLES RICHARDSON(						

BUILDING NOTES

BUILDING DIMENSIONS

BAS=[ORIG=0,0] W17 U4L4 W13 D4L4 S13 S10 W13 N7 U3L3 W6 N15 W33 S15 E5 S32 W18 S12 E5 S10 E25 S2 E12 N20 E16 N3 E12 S3 E36 N49 $
BAS=[YR=2023;ORIG=-110,43] W20 S12 E24 N6 W4 N6 $
FEP=[ORIG=-21,-4] N15 U3L3 W7 D3L3 S15 E13 $
FSP=[ORIG=-93,13] W7 S13 E12 N13 W5 $
FOP=[ORIG=-38,13] W13 S10 E13 N10 $
FST=[ORIG=-106,57] S10 E5 N10 W5 $
FOP=[ORIG=-48,49] E12 N3 W12 S3 $
UOP=[YR=2023;ORIG=-94,41] E6 S4 W6 N4 $
.

EXTRA FEATURES

LN	OB/XF CODE	DESCRIPTION	BLD	CAP	L	W	UNITS	UT	Adj R	ADJ UNIT PRICE	ORIG COND	YEAR ON	YEAR ACTUAL	Q	% COND	OB/XF MKT VALUE	NOTES
1	0166	CONC,PAVMT	0	0	0	0	2,552.00	UT	1.50	1.50	100	2000	2000	3	100	3,828	
2	0296	SHED METAL	0	0	0	0	1.00	UT	0.00	0.00	100	2017	2017	3	100	2,500	
3	0296	SHED METAL	0	0	12	24	1.00	UT	3,500.00	3,500.00	100	2023	2022		100	3,500	
4	0104	GENERATOR	0	0	0	0	1.00	UT	6,000.00	6,000.00	100	2023	2022		80	4,800	
5	0120	CLFENCE 4	0	0	0	0	1.00	UT	400.00	400.00	100	2023	2022		100	400	

LAND DESCRIPTION

TOTAL OB/XF 15,028

LN	USE CODE	CLS	LAND USE DESCRIPTION	CAP	RD	LOC ZONE	FRONT	DEPTH	TOT LND UTS	UNIT TYPE	DT	DPTH FACT	% COND	TOT ADJ	UNIT PRICE	ADJ UNIT PRICE	LAND VALUE	OTHER ADJUSTMENTS AND NOTES	YEAR	DENSITY	DECL	FRZ	YR	CONSRV
1	0100	C	SFR	0		RSF-	1209.00	215.00	1.00	LT		1.00	1.00	1.00	35,000.00	35,000.00	35,000							

REVIEW DATE 06/15/2023 BY KS Total Acres: 1.03 Total Land Value: 35,000 Market: 0 Agricultural: 0 Common: 35,000 PRINTED 10/03/2025 BY SYS