COMM SW COR OF NW1/4 OF SW1/4,
RUN N 609.90 FT, E 369.74 FT
FOR POB, RUN N 199.62 FT, E

GANSKOP JEFFREY L/GANSKOP LINDA J
P O BOX 1815
LAKE CITY, FL 32056

2026

31-3S-17-06199-000

COLUMBIA COUNTY PROPERTY

BUILDING CHARACTERISTICS

ELEMENT	CD	CONSTRUCTION
Exterior Wall	25	MOD METAL 100
Roof Structur	10	STEEL FRME 100
Roof Cover	12	MODULAR MT 100
Interior Wall	01	MINIMUM 100
Interior Floo	03	CONC FINSH 100
Ceiling	03	PART.FIN. 100
Air Condition	01	NONE 100
Heating Type	01	NONE 100
Plumbing		10 100
Frame	05	STEEL 100
Story Height		16 100
RMS		5 100
Stories	1.	1. 100
Units		0 100
Condition Adj	03	03 100
Quality	03	03
DOR CODE	4800	WAREHOSE/DISTRB
MAP NUM		MKT AREA 06
NEIGHBORHOOD/LOC	31317.00	1.00/

AREA TYPE	TOTAL GROSS AREA	PCT OF BASE	YEAR	TOT ADJ AREA	SUBAREA MARKET VALUE
AOF	372	150		558	8,998
AOF	3,162	150		4,743	76,481
BAS	8,086	100		8,086	130,387
CAN	50	30		15	242
CAN	60	30		18	291
CLP	516	60		310	4,999
TOTALS	12,246			13,730	221,396

MARKET ADJUSTMENTS

TYPE	MDL	EFF. AREA	TOT ADJ PTS	EFF. BASE RATE	REPL. COST NEW	AYB	EYB	ECON	FNCT		NORM	% COND
8400	06	13,730	87.1603	32.25	442,792	1974	1974	0	0	0	50.00	50.00

1 WAREH STOR 0% - 0 Heated Area: 11620 HX Base Yr

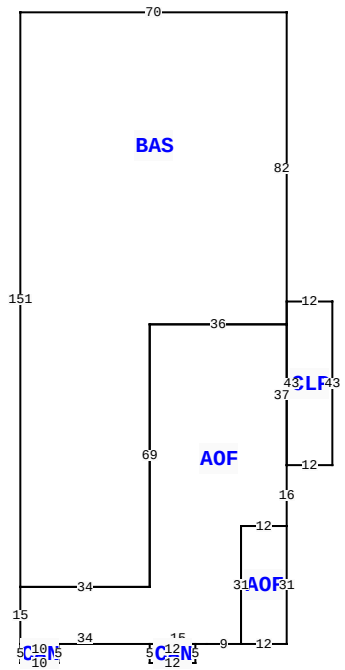

162 NW RIDGEWOOD AVE, LAKE CITY

BLD DATE		LGL DATE	
XF DATE		LAND DATE	
INC DATE		AG DATE	

VALUATION SUMMARY

VALUATION BY	STANDARD
Tax Group: 1	Tax Dist:
BUILDING MARKET VALUE	221,396
TOTAL MARKET OB/XF VALUE	4,350
TOTAL LAND VALUE - MARKET	144,261
TOTAL MARKET VALUE	370,007
SOH/AGL Deduction	0
ASSESSED VALUE	370,007
TOTAL EXEMPTION VALUE	0
BASE TAXABLE VALUE	370,007
TOTAL JUST VALUE	370,007
NCON VALUE	0
INCOME VALUE	
PREVIOUS YEAR MKT VALUE	370,007

LAND:1:1: 137.43 X 282.99 + 9,600 SF.

PERMIT NUM	DESCRIPTION	AMT	ISSUED
000046552	Roof Replacement	7,000	02/17/2023
20-0061	COMMERCIAL	0	06/04/2020

SALES DATA

OFF RECORD Number	DATE	TYPE INST	Q U	V I	RSN CD	SALE PRICE
1255/0843	5/24/2013	WD	U	I	12	175,000
GRANTOR: CLOUMBIA BANK						
GRANTEE: JEFFREY L & LINDA J						
1250/2218	3/08/2013	CT	U	I	18	100
GRANTOR: CLERK OF COURT (UNRAU						
GRANTEE: COLUMBIA BANK						

BUILDING NOTES

BUILDING DIMENSIONS

BAS= W70 S151 AOF= S15 CAN= S5 E10 N5 W10$ E34 CAN= S5 E12 N5 W12$ E15 E9 AOF= E12 N31 W12 S31$ N31 E12 N16 CLP= E12 N43W12 S43$ N37 W36 S69 W34$ E34 N69 E36 N82$.

EXTRA FEATURES

LN	OB/XF CODE	DESCRIPTION	BLD	CAP	L	W	UNITS	UT	Adj R	ADJ UNIT PRICE	ORIG COND	YEAR ON	YEAR ACTUAL	Q	% COND	OB/XF MKT VALUE	NOTES
1	0166	CONC,PAVMT	0	0	0	0	1.00	UT	0.00	0.00	100	0	0	3	100	800	
2	0260	PAVEMENT-A	0	0	0	0	1.00	UT	3,500.00	3,500.00	50	0	0	3	50	1,750	
3	0140	CLFENCE 6	0	0	0	0	1.00	UT	0.00	0.00	100	0	0	3	100	1,700	
4	0296	SHED METAL	0	0	0	0	1.00	UT	0.00	0.00	100	2008	2008	3	100	100	

LAND DESCRIPTION

TOTAL OB/XF 4,350

LN	USE CODE	CLS	LAND USE DESCRIPTION	CAP	RD	LOC ZONE	FRONT	DEPTH	TOT LND UTS	UNIT TYPE	DT	DPTH FACT	% COND	TOT ADJ	UNIT PRICE	ADJ UNIT PRICE	LAND VALUE	OTHER ADJUSTMENTS AND NOTES	YEAR	DENSITY	DECL	FRZ	YR	CONSRV
1	4800	C	WAREHOUSE	0		*CG	137.00	283.00	48,491.00	SF		1.00	1.00	0.70	4.25	2.98	144,261							

REVIEW DATE 12/15/2021 BY ME Total Acres: 1.11 Total Land Value: 144,261 Market: 0 Agricultural: 0 Common: 144,261 PRINTED 11/17/2025 BY SYS