LOT 12 BLOCK 4 HOLLIDAY
HEIGHTS REPLAT.

HOWARD EDWARD W/HOWARD JOYCE K
596 NW RIDGEWOOD AVE
LAKE CITY, FL 32055

2026

31-3S-17-06157-000

COLUMBIA COUNTY PROPERTY

BUILDING CHARACTERISTICS

ELEMENT	CD	CONSTRUCTION
Exterior Wall	26	ALM SIDING 100
Roof Structur	03	GABLE/HIP 100
Roof Cover	03	COMP SHNGL 100
Interior Wall	05	DRYWALL 100
Interior Floo	12	HARDWOOD 100
Air Condition	03	CENTRAL 100
Heating Type	04	AIR DUCTED 100
Bedrooms		3 100
Bathrooms		2 100
Frame	01	NONE 100
Stories	1.	1. 100
Architectual	05	CONV 100
Units		0 100
Condition Adj	01	01 100
Kitchen Adjus	01	01 100
Quality	05	05
DOR CODE	0100	SINGLE FAMILY
MAP NUM		MKT AREA 06
NEIGHBORHOOD/LOC	31317.040	1.00/

AREA TYPE	TOTAL GROSS AREA	PCT OF BASE	YEAR	TOT ADJ AREA	SUBAREA MARKET VALUE
BAS	1,464	100		1,464	65,452
FCP	308	25		77	3,443
FOP	60	30		18	805
SFB	112	80		90	4,024
SFB	432	80		346	15,469
UOP	432	20		86	3,845
TOTALS	2,808			2,081	93,036

MARKET ADJUSTMENTS

TYPE	MDL	EFF. AREA	TOT ADJ PTS	EFF. BASE RATE	REPL. COST NEW	AYB	EYB	ECON	FNCT		NORM	% COND
0100	01	2,081	88.7040	99.35	206,747	1960	1960	20	0	0	35.00	45.00

1 SINGLE FAM 100% - 2016 Heated Area: 2008 HX Base Yr 2016

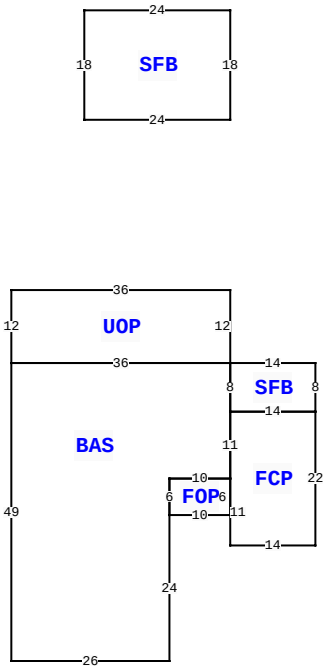

596 NW RIDGEWOOD AVE, LAKE CITY

BLD DATE		LGL DATE	
XF DATE		LAND DATE	04/27/2022 MLU
INC DATE		AG DATE	

VALUATION SUMMARY

VALUATION BY		STANDARD
Tax Group: 1	Tax Dist:	
BUILDING MARKET VALUE		93,036
TOTAL MARKET OB/XF VALUE		400
TOTAL LAND VALUE - MARKET		11,348
TOTAL MARKET VALUE		104,784
SOH/AGL Deduction		46,853
ASSESSED VALUE		57,931
TOTAL EXEMPTION VALUE	HX HB	32,931
BASE TAXABLE VALUE		25,000
TOTAL JUST VALUE		104,784
NCON VALUE		0
INCOME VALUE		
PREVIOUS YEAR MKT VALUE		104,784

PERMIT NUM	DESCRIPTION	AMT	ISSUED

SALES DATA

OFF RECORD Number	DATE	TYPE INST	Q U /	V I /	RSN CD	SALE PRICE
1304/1076	10/30/2015	WD	U	I	18	31,200
GRANTOR: SECRETARY OF HOUSING						
GRANTEE: EDWARD W & JOYCE K						
1293/1365	4/08/2015	WD	U	I	18	100
GRANTOR: BANK OF AMERICA N A						
GRANTEE: SECRETARY OF HOUSIN						

BUILDING NOTES

BUILDING DIMENSIONS

BAS= W36 S49 E26 N24 FOP= E10 N6 W10 S6$ N6 E10 FCP= S11 E14 N22 W14 S11$ N11 SFB= E14 N8 W14 S8$ N8$ UOP= N12 W36 S12 E36$ PTR= N40 SFB= N18 W24 S18 E24$ S40$.

EXTRA FEATURES

LN	OB/XF CODE	DESCRIPTION	BLD	CAP	L	W	UNITS	UT	Adj R	ADJ UNIT PRICE	ORIG COND	YEAR ON	YEAR ACTUAL	Q	% COND	OB/XF MKT VALUE	NOTES
1	0166	CONC,PAVMT	0	100	0	0	1.00	UT	0.00	0.00	100	0	0	3	100	300	
2	0169	FENCE/WOOD	0	100	0	0	1.00	UT	0.00	0.00	100	2011	2011	3	100	100	

LAND DESCRIPTION

TOTAL OB/XF 400

LN	USE CODE	CLS	LAND USE DESCRIPTION	CAP	RD	LOC ZONE	FRONT	DEPTH	TOT LND UTS	UNIT TYPE	DT	DPTH FACT	% COND	TOT ADJ	UNIT PRICE	ADJ UNIT PRICE	LAND VALUE	OTHER ADJUSTMENTS AND NOTES	YEAR	DENSITY	DECL	FRZ	YR	CONSRV
1	0100	C	SFR	100		*RSF-1	0.00	0.00	13,272.11	SF		1.00	1.00	0.90	0.95	0.86	11,348							

REVIEW DATE 08/15/2016 BY DF Total Acres: 0.30 Total Land Value: 11,348 Market: 0 Agricultural: 0 Common: 11,348 PRINTED 11/05/2025 BY SYS