N 100 FT OF E1/2 OF THE FOLLOWIN
OF LOT 17 BLOCK 1 IDELAWILE REPL
W LINE OF GWEN LAKE AVE, S 374.6

THE PRINCIPAL LLC
367 SW MEADOW TER
LAKE CITY, FL 32024

2026

31-3S-17-06066-000

COLUMBIA COUNTY PROPERTY

BUILDING CHARACTERISTICS

ELEMENT	CD	CONSTRUCTION
Exterior Wall	31	VINYL SID 100
Roof Structur	03	GABLE/HIP 100
Roof Cover	03	COMP SHNGL 100
Interior Wall	01	MINIMUM 100
Interior Wall	00	N/A 0
Interior Floo	02	MIN PLYWD 100
Interior Floo	01	NONE 0
Air Condition	01	NONE 100
Heating Type	01	NONE 100
Bedrooms		3 100
Bathrooms		3 100
Frame	01	NONE 100
Stories	1.	1. 100
Architectual	05	CONV 100
Units		0 100
Condition Adj	01	01 100
Kitchen Adjus	01	01 100
Quality	01	01
DOR CODE	0100	SINGLE FAMILY
MAP NUM		MKT AREA 06
NEIGHBORHOOD/LOC	31317.00	1.00/

AREA TYPE	TOTAL GROSS AREA	PCT OF BASE	YEAR	TOT ADJ AREA	SUBAREA MARKET VALUE
BAS	2,024	100		2,024	18,997
FCP	216	25		54	507
FOP	60	30		18	169
UCP	812	20		162	1,521
UST	72	45		32	300
TOTALS	3,184			2,290	21,494

MARKET ADJUSTMENTS

TYPE	MDL	EFF. AREA	TOT ADJ PTS	EFF. BASE RATE	REPL. COST NEW	AYB	EYB	ECON	FNCT	AP	NORM	% COND
0100	01	2,290	41.9040	46.93	107,470	1958	1958	20	0	95	35.00	20.00

1 SINGLE FAM 0% - 0 Heated Area: 2024 HX Base Yr

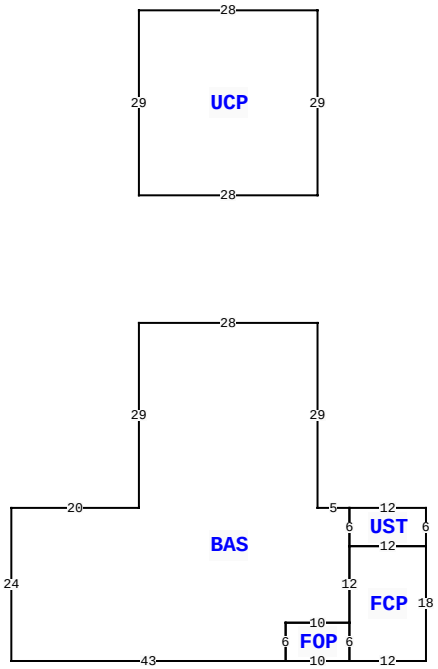

234 NW GWEN LAKE AVE, LAKE CITY

BLD DATE		LGL DATE	
XF DATE		LAND DATE	04/27/2022 MLU
INC DATE		AG DATE	

VALUATION SUMMARY

VALUATION BY	STANDARD
Tax Group: 1	Tax Dist:
BUILDING MARKET VALUE	21,494
TOTAL MARKET OB/XF VALUE	1,100
TOTAL LAND VALUE - MARKET	19,864
TOTAL MARKET VALUE	42,458
SOH/AGL Deduction	2,876
ASSESSED VALUE	39,582
TOTAL EXEMPTION VALUE	0
BASE TAXABLE VALUE	39,582
TOTAL JUST VALUE	42,458
NCON VALUE	0
INCOME VALUE	
PREVIOUS YEAR MKT VALUE	42,458

PERMIT NUM	DESCRIPTION	AMT	ISSUED

SALES DATA

OFF RECORD Number	DATE	TYPE INST	Q U	V I	RSN CD	SALE PRICE
1308/2014	1/19/2016	WD	U	I	11	100
GRANTOR: JAQUELINE DIAZ (A SIN						
GRANTEE: THE PRINCIPAL LLC						
1307/2487	1/15/2016	WD	Q	I	01	80,000
GRANTOR: JENNIFER H BREWIN						
GRANTEE: JAQUELINE DIAZ						

BUILDING NOTES

BUILDING DIMENSIONS

BAS= W28 S29 W20 S24 E43 FOP= E10N6 W10 S6$ N6 E10 FCP= S6 E12N18 W12 S12$ N12 UST= E12 N6 W12 S6$ N6W5 N29$ PTR=N20 UCP= N29 W28 S29 E28$ S20$.

EXTRA FEATURES

LN	OB/XF CODE	DESCRIPTION	BLD	CAP	L	W	UNITS	UT	Adj R	ADJ UNIT PRICE	ORIG COND	YEAR ON	YEAR ACTUAL	Q	% COND	OB/XF MKT VALUE	NOTES
1	0294	SHED WOOD/	0	0	0	0	1.00	UT	0.00	0.00	100	1993	1993	3	100	700	
2	0166	CONC,PAVMT	0	0	0	0	1.00	UT	0.00	0.00	100	1993	1993	3	100	300	
3	0120	CLFENCE 4	0	0	0	0	1.00	UT	0.00	0.00	100	2011	2011	3	100	100	

LAND DESCRIPTION

TOTAL OB/XF 1,100

LN	USE CODE	CLS	LAND USE DESCRIPTION	CAP	RD	LOC ZONE	FRONT	DEPTH	TOT LND UTS	UNIT TYPE	DT	DPTH FACT	% COND	TOT ADJ	UNIT PRICE	ADJ UNIT PRICE	LAND VALUE	OTHER ADJUSTMENTS AND NOTES	YEAR	DENSITY	DECL	FRZ	YR	CONSRV
1	0100	C	SFR	0		*RSF-2	0.00	0.00	20,909.00	SF		1.00	1.00	1.00	0.95	0.95	19,864							

REVIEW DATE 08/19/2016 BY DF Total Acres: 0.48 Total Land Value: 19,864 Market: 0 Agricultural: 0 Common: 19,864 PRINTED 10/02/2025 BY SYS