LOTS 6, 7 & 8 BLOCK 4 UNIT 2 GWE
S/D.

CAUSEY WILSON E & MILDRED C BROOKS TRUST DATED FEB
545 NW SHELBY TER
LAKE CITY, FL 32055

2026

31-3S-17-06004-000

COLUMBIA COUNTY PROPERTY

BUILDING CHARACTERISTICS

ELEMENT	CD	CONSTRUCTION
Exterior Wall	19	COMMON BRK 50
Exterior Wall	31	VINYL SID 50
Roof Structur	03	GABLE/HIP 100
Roof Cover	03	COMP SHNGL 100
Interior Wall	04	PLYWOOD 50
Interior Wall	05	DRYWALL 50
Interior Floo	12	HARDWOOD 100
Air Condition	01	NONE 100
Heating Type	02	CONVECTION 100
Bedrooms		3 100
Bathrooms		3.5 100
Frame	01	NONE 100
Stories	1.5	1.5 100
Architectual	05	CONV 100
Units		0 100
Condition Adj	01	01 100
Kitchen Adjus	01	01 100
Quality	05	05
DOR CODE	0100	SINGLE FAMILY
MAP NUM		MKT AREA 06
NEIGHBORHOOD/LOC	31317.010	1.00/

AREA TYPE	TOTAL GROSS AREA	PCT OF BASE	YEAR	TOT ADJ AREA	SUBAREA MARKET VALUE
BAS	1,702	100		1,702	105,308
FCP	660	25		165	10,209
FOP	38	30		11	681
FOP	38	30		11	681
FUS	532	100		532	32,917
FUS	532	100		532	32,917
PTO	1,076	5		54	3,341
UBM	1,222	20		244	15,097
UST	64	45		29	1,795
TOTALS	5,864			3,280	202,945

MARKET ADJUSTMENTS

TYPE	MDL	EFF. AREA	TOT ADJ PTS	EFF. BASE RATE	REPL. COST NEW	AYB	EYB	ECON	FNCT		NORM	% COND
0100	01	3,280	84.9870	95.19	312,223	1961	1961	0	0	0	35.00	65.00

2 SINGLE FAM 0% - 2024 Heated Area: 2766 HX Base Yr

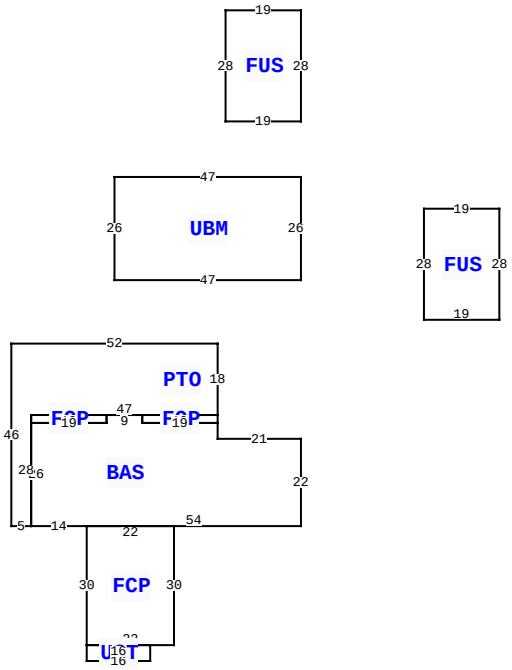

545 NW SHELBY TER, LAKE CITY

BLD DATE		LGL DATE	
XF DATE		LAND DATE	04/27/2022 MLU
INC DATE		AG DATE	

VALUATION SUMMARY

VALUATION BY	STANDARD
Tax Group: 1	Tax Dist:
BUILDING MARKET VALUE	202,945
TOTAL MARKET OB/XF VALUE	2,250
TOTAL LAND VALUE - MARKET	22,562
TOTAL MARKET VALUE	227,757
SOH/AGL Deduction	0
ASSESSED VALUE	227,757
TOTAL EXEMPTION VALUE	0
BASE TAXABLE VALUE	227,757
TOTAL JUST VALUE	227,757
NCON VALUE	0
INCOME VALUE	
PREVIOUS YEAR MKT VALUE	227,757

PERMIT NUM	DESCRIPTION	AMT	ISSUED
0809	REROOF	15,000	10/02/2025

SALES DATA

OFF RECORD Number	DATE	TYPE INST	Q U	V I	RSN CD	SALE PRICE
1485/321	2/17/2023	WD	U	I	11	100
GRANTOR: BROOKS MILDRED C						
GRANTEE: CAUSEY WILSON E & M						
0947/2522	2/25/2002	WD	P	I	99	122,500
GRANTOR: DENUNE						
GRANTEE: J RONALD & MILDRED						

BUILDING NOTES

BUILDING DIMENSIONS

BAS= W21 N4 FOP= N2 PTO= N18 W52 S46 E5 N28 E47 $ W19 S2E19$ W19 N2 W9 FOP= W19 S2 E19 N2$ S2 W19 S26 E14 FCP= S30 UST= S4 E16 N4 W16$ E22 N30 W22$ E54 N22$ PTR= N40 UBM= N26 W47 S26 E47$ S40$ PTR= N30 E50 FUS= N28W19S28 E19$ S30 W50$ PTR= N80 FUS= N28 W19 S28 E19$ S80$.

EXTRA FEATURES

LN	OB/XF CODE	DESCRIPTION	BLD	CAP	L	W	UNITS	UT	Adj R	ADJ UNIT PRICE	ORIG COND	YEAR ON	YEAR ACTUAL	Q	% COND	OB/XF MKT VALUE	NOTES
1	0260	PAVEMENT-A	0	0	0	0	1.00	UT	0.00	0.00	100	0	0	3	100	200	
2	0190	FPLC PF	0	0	0	0	1.00	UT	1,200.00	1,200.00	100	0	0	3	100	1,200	
3	0294	SHED WOOD/	0	0	0	0	1.00	UT	0.00	0.00	100	0	0	3	100	250	
4	0120	CLFENCE 4	0	0	0	0	1.00	UT	0.00	0.00	100	1993	1993	3	100	600	

LAND DESCRIPTION

TOTAL OB/XF 2,250

LN	USE CODE	CLS	LAND USE DESCRIPTION	CAP	RD	LOC ZONE	FRONT	DEPTH	TOT LND UTS	UNIT TYPE	DT	DPTH FACT	% COND	TOT ADJ	UNIT PRICE	ADJ UNIT PRICE	LAND VALUE	OTHER ADJUSTMENTS AND NOTES	YEAR	DENSITY	DECL	FRZ	YR	CONSRV
1	0133	C	SFR LAKE	0		*RSF-2	0.00	0.00	60,165.32	SF		1.00	1.00	0.38	1.00	0.38	22,562							

REVIEW DATE 08/15/2016 BY DF Total Acres: 1.38 Total Land Value: 22,562 Market: 0 Agricultural: 0 Common: 22,562 PRINTED 11/20/2025 BY SYS