LOT 5 BLOCK 1 UNIT 1 GWEN LAKE E

736-371, WD 1044-2596, WD 1256-7

WILLIAMS KODY
633 NW PALM DR
LAKE CITY, FL 32055

2026

31-3S-17-05969-000

BUILDING CHARACTERISTICS

ELEMENT	CD	CONSTRUCTION
Exterior Wall	19	COMMON BRK 100
Roof Structur	08	IRREGULAR 100
Roof Cover	03	COMP SHNGL 100
Interior Wall	05	DRYWALL 100
Interior Floo	12	HARDWOOD 80
Interior Floo	15	HARDTILE 20
Air Condition	03	CENTRAL 100
Heating Type	03	FORCED AIR 100
Bedrooms		3 100
Bathrooms		2 100
Frame	01	NONE 100
Stories	1.	1. 100
Architectual	05	CONV 100
Units		0 100
Condition Adj	03	03 100
Kitchen Adjus	01	01 100
Quality	05	05
DOR CODE	0100	SINGLE FAMILY
MAP NUM		MKT AREA 06
NEIGHBORHOOD/LOC	31317.010	1.00/

AREA TYPE	TOTAL GROSS AREA	PCT OF BASE	YEAR	TOT ADJ AREA	SUBAREA MARKET VALUE
BAS	384	100		384	35,358
BAS	997	100		997	91,803
FOP	20	30		6	553
UEP	120	60		72	6,630
UST	234	45		105	9,668
TOTALS	1,755			1,564	144,011

MARKET ADJUSTMENTS

TYPE	MDL	EFF. AREA	TOT ADJ PTS	EFF. BASE RATE	REPL. COST NEW	AYB	EYB	ECON	FNCT		NORM	% COND
0100	01	1,564	126.4800	141.66	221,556	1950	1990	0	0	0	35.00	65.00

1 SINGLE FAM 0% - 2024 Heated Area: 1381 HX Base Yr

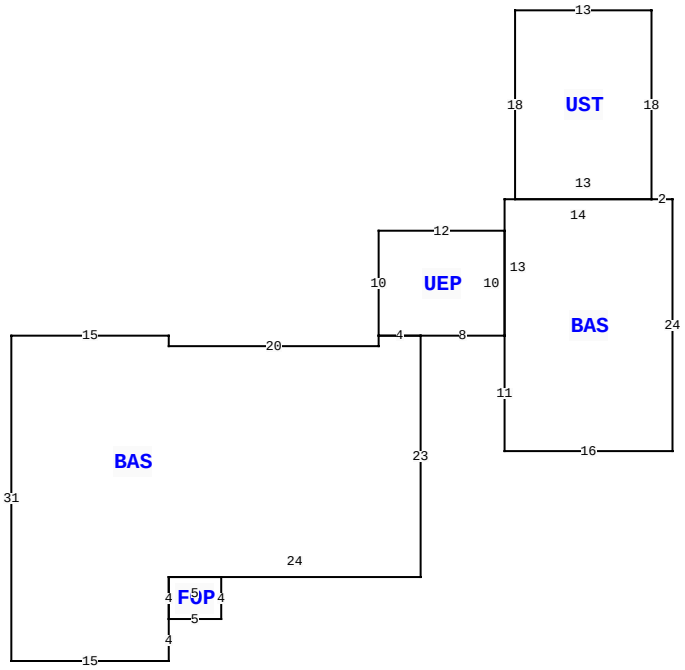

633 NW PALM DR, LAKE CITY

BLD DATE		LGL DATE	
XF DATE		LAND DATE	04/27/2022 MLU
INC DATE		AG DATE	

COLUMBIA COUNTY PROPERTY

PAGE 1 of 1 1

VALUATION SUMMARY

VALUATION BY	STANDARD
Tax Group: 1	Tax Dist:
BUILDING MARKET VALUE	144,011
TOTAL MARKET OB/XF VALUE	2,950
TOTAL LAND VALUE - MARKET	13,109
TOTAL MARKET VALUE	160,070
SOH/AGL Deduction	0
ASSESSED VALUE	160,070
TOTAL EXEMPTION VALUE	0
BASE TAXABLE VALUE	160,070
TOTAL JUST VALUE	160,070
NCON VALUE	0
INCOME VALUE	
PREVIOUS YEAR MKT VALUE	162,286

SALE:1:1: LOT 5 BLK A GWEN LAKE ESTATES UNIT 1

PERMIT NUM	DESCRIPTION	AMT	ISSUED
76	MAINT/ALTR	50	03/03/2014

SALES DATA

OFF RECORD Number	DATE	TYPE INST	Q / U	V / I	RSN CD	SALE PRICE
1483/2642	1/23/2023	WD	Q	I	01	190,000
GRANTOR: WENDORFF DONNA LEE						
GRANTEE: WILLIAMS KODY						
1293/0392	4/20/2015	WD	Q	I	01	99,000
GRANTOR: NORMA H CAMPBELL TRUS						
GRANTEE: DONNA LEE WENDORFF						

BUILDING NOTES

BUILDING DIMENSIONS

BAS= W20 N1 W15 S31 E15 N4 FOP= E5 N4 W5 S4$ N4 E24 N23 UEP= E8 BAS= S11 E16 N24 W2 UST= N18 W13 S18 E13 $ W14 S13$ N10 W12 S10 E4$ W4 S1$.

EXTRA FEATURES

LN	OB/XF CODE	DESCRIPTION	BLD	CAP	L	W	UNITS	UT	Adj R	ADJ UNIT PRICE	ORIG COND	YEAR ON	YEAR ACTUAL	Q	% COND	OB/XF MKT VALUE	NOTES
1	0166	CONC,PAVMT	0	0	0	0	1.00	UT	0.00	0.00	100	0	0	3	100	50	
2	0190	FPLC PF	0	0	0	0	1.00	UT	1,200.00	1,200.00	100	0	0	3	100	1,200	
3	0296	SHED METAL	0	0	0	0	1.00	UT	0.00	0.00	100	2016	2016	3	100	1,600	
4	0120	CLFENCE 4	0	0	0	0	1.00	UT	0.00	0.00	100	2016	2016	3	100	100	

LAND DESCRIPTION

TOTAL OB/XF 2,950

LN	USE CODE	CLS	LAND USE DESCRIPTION	CAP	RD	LOC ZONE	FRONT	DEPTH	TOT LND UTS	UNIT TYPE	DT	DPTH FACT	% COND	TOT ADJ	UNIT PRICE	ADJ UNIT PRICE	LAND VALUE	OTHER ADJUSTMENTS AND NOTES	YEAR	DENSITY	DECL	FRZ	YR	CONSRV
1	0100	C	SFR	0		*RSF-1	0.00	0.00	13,799.28	SF		1.00	1.00	1.00	0.95	0.95	13,109							

REVIEW DATE 02/20/2023 BY ME Total Acres: 0.32 Total Land Value: 13,109 Market: 0 Agricultural: 0 Common: 13,109 PRINTED 11/17/2025 BY SYS