W1/2 OF SW1/4 OF NW1/4 S OF RD 1
OF E1/2 OF SW1/4 OF NW1/4 S OF R

KING TRAVIS DAVID/KING AMANDA SUZANNE
1034 SW COUNTY ROAD 138
FORT WHITE, FL 32038

2026

30-7S-17-10069-002

COLUMBIA COUNTY PROPERTY

BUILDING CHARACTERISTICS

ELEMENT	CD	CONSTRUCTION
Exterior Wall	19	COMMON BRK 70
Exterior Wall	05	AVERAGE 30
Roof Structur	03	GABLE/HIP 100
Roof Cover	12	MODULAR MT 100
Interior Wall	04	PLYWOOD 100
Interior Floo	14	CARPET 100
Air Condition	03	CENTRAL 100
Heating Type	04	AIR DUCTED 100
Bedrooms		3 100
Bathrooms		4 100
Frame	01	NONE 100
Stories	1.5	1.5 100
Architectual	05	CONV 100
Units		0 100
Condition Adj	03	03 100
Kitchen Adjus	01	01 100
Quality	05	05
DOR CODE	5000	IMPROVED AG
MAP NUM		MKT AREA 02
NEIGHBORHOOD/LOC	30717.00	1.00/

AREA TYPE	TOTAL GROSS AREA	PCT OF BASE	YEAR	TOT ADJ AREA	SUBAREA MARKET VALUE
BAS	2,612	100		2,612	249,012
FCP	528	25		132	12,584
FOP	65	30		20	1,907
FOP	156	30		47	4,481
FSP	60	40		24	2,288
FSP	210	40		84	8,008
FUS	1,209	100		1,209	115,258
TOTALS	4,840			4,128	393,538

MARKET ADJUSTMENTS

TYPE	MDL	EFF. AREA	TOT ADJ PTS	EFF. BASE RATE	REPL. COST NEW	AYB	EYB	ECON	FNCT		NORM	% COND
0100	01	4,128	116.4146	130.38	538,209	1976	2000	0	0	0	26.88	73.12

1 SINGLE FAM 100% - 2025 Heated Area: 3821 HX Base Yr 2025

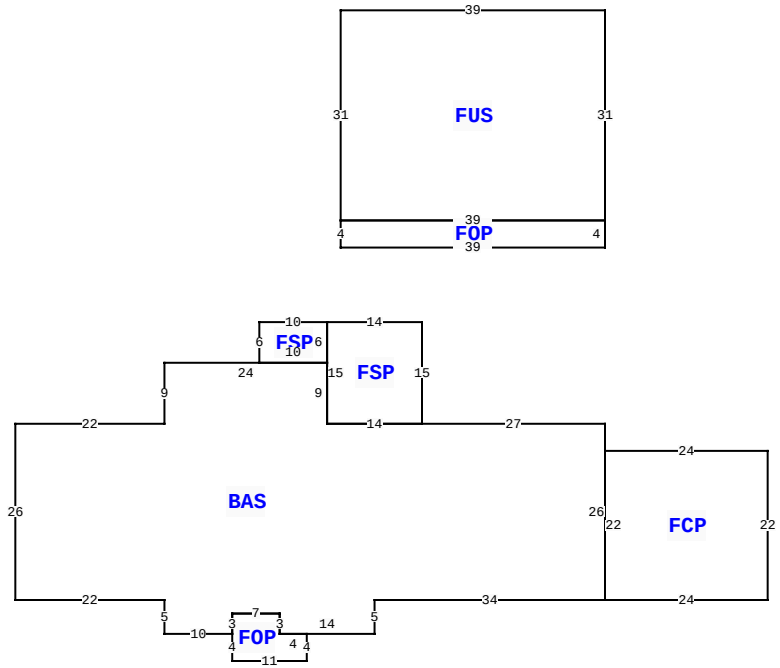

1034 SW COUNTY ROAD 138 , FORT WHITE

BLD DATE		LGL DATE	
XF DATE		LAND DATE	04/08/2025 MLU
INC DATE		AG DATE	

VALUATION SUMMARY

VALUATION BY		STANDARD
Tax Group: 3	Tax Dist:	
BUILDING MARKET VALUE		393,538
TOTAL MARKET OB/XF VALUE		35,004
TOTAL LAND VALUE - MARKET		143,500
TOTAL MARKET VALUE		441,002
SOH/AGL Deduction		0
ASSESSED VALUE		441,002
TOTAL EXEMPTION VALUE	HX HB	50,722
BASE TAXABLE VALUE		390,280
TOTAL JUST VALUE		572,042
NCON VALUE		0
INCOME VALUE		
PREVIOUS YEAR MKT VALUE		578,911

PERMIT NUM	DESCRIPTION	AMT	ISSUED
000047943	Roof Replacement	25,300	08/22/2023
000042491	Communications To	242,770	09/22/2021
12235	POOL	170	03/06/1997
7183	M H	60	05/20/1993

SALES DATA

OFF RECORD Number	DATE	TYPE INST	Q U	V I	RSN CD	SALE PRICE
1512/584	4/10/2024	WD	U	I	16	10,000
GRANTOR: SIMMS DALE						
GRANTEE: KING TRAVIS DAVID						
1512/582	4/10/2024	WD	U	I	16	655,000
GRANTOR: SIMMS DALE						
GRANTEE: KING TRAVIS DAVID						

BUILDING NOTES

BUILDING DIMENSIONS

BAS= W27 FSP= N15 W14 S15 E14$ W14 N9 FSP= N6 W10 S6 E10$ W24 S9 W22 S26 E22 S5 E10FOP= S4 E11 N4 W4 N3 W7 S3$ N3 E7 S3 E14 N5 E34 FCP= E24N22 W24 S22$ N26$ PTR=N30 FUS= N31 W39 S31 FOP= S4 E39 N4 W39$ E39$ S30$.

EXTRA FEATURES

LN	OB/XF CODE	DESCRIPTION	BLD	CAP	L	W	UNITS	UT	Adj R	ADJ UNIT PRICE	ORIG COND	YEAR ON	YEAR ACTUAL	Q	% COND	OB/XF MKT VALUE	NOTES
1	0020	BARN,FR	0	100	0	0	1.00	UT	0.00	0.00	100	0	0	3	100	300	
2	0040	BARN,POLE	0	100	30	175	1.00	UT	0.00	0.00	100	0	0	3	100	5,512	
3	0020	BARN,FR	0	100	20	24	1.00	UT	0.00	0.00	100	0	0	3	100	500	
4	0020	BARN,FR	0	100	20	24	1.00	UT	0.00	0.00	100	0	0	3	100	500	
5	9947	Septic	0	100	0	0	1.00	UT	3,000.00	3,000.00	100			3	100	3,000	
6	0190	FPLC PF	0	100	0	0	1.00	UT	1,200.00	1,200.00	100	0	0	3	100	1,200	
7	0280	POOL R/CON	0	100	16	32	512.00	UT	70.00	70.00	100	1990	1990	3	40	14,336	
8	0166	CONC,PAVMT	0	100	0	0	805.00	UT	1.50	1.50	100	1993	1993	3	100	1,208	
9	0282	POOL ENCL	0	100	32	44	1,408.00	UT	15.00	15.00	100	2013	2013	3	40	8,448	

LAND DESCRIPTION

TOTAL OB/XF 35,004

LN	USE CODE	CLS	LAND USE DESCRIPTION	CAP	RD	LOC ZONE	FRONT	DEPTH	TOT LND UTS	UNIT TYPE	DT	DPTH FACT	% COND	TOT ADJ	UNIT PRICE	ADJ UNIT PRICE	LAND VALUE	OTHER ADJUSTMENTS AND NOTES	YEAR	DENSITY	DECL	FRZ	YR	CONSRV
1	0100	C	SFR	100		A-1	0.00	0.00	1.00	AC		1.00	1.00	1.00	7,000.00	7,000.00	7,000							
2	6200	A	PASTURE 3	0		A-1	0.00	0.00	19.50	AC		1.00	1.00	1.00	280.00	280.00	5,460							
3	9910	M	MKT.VAL.AG	0		A-1	0.00	0.00	19.50	AC		1.00	1.00	1.00	7,000.00	7,000.00	136,500							

REVIEW DATE 04/17/2024 BY ME Total Acres: 20.50 Total Land Value: 12,460 Market: 136,500 Agricultural: 5,460 Common: 7,000 PRINTED 11/03/2025 BY SYS