LOT 8 SASSAFRAS ACRES S/D.

378-516, LE 1436-1029,

MCKINZEY DAVID A/MCKINZEY DIANE M
399 SW COUNTY ROAD 138
FORT WHITE, FL 32038

2026

30-7S-17-10068-008

COLUMBIA COUNTY PROPERTY

BUILDING CHARACTERISTICS

ELEMENT	CD	CONSTRUCTION
Exterior Wall	31	VINYL SID 100
Roof Structur	03	GABLE/HIP 100
Roof Cover	14	PREFIN MT 100
Interior Wall	05	DRYWALL 100
Interior Floo	14	CARPET 90
Interior Floo	06	VINYL ASB 10
Air Condition	03	CENTRAL 100
Heating Type	04	AIR DUCTED 100
Bedrooms		3 100
Bathrooms		1.5 100
Frame	01	NONE 100
Stories	1.	1. 100
Architectual	05	CONV 100
Units		0 100
Condition Adj	03	03 100
Kitchen Adjus	01	01 100
Quality	05	05
DOR CODE	0100	SINGLE FAMILY
MAP NUM		MKT AREA 02
NEIGHBORHOOD/LOC	30717.040	1.00/

AREA TYPE	TOTAL GROSS AREA	PCT OF BASE	YEAR	TOT ADJ AREA	SUBAREA MARKET VALUE
BAS	450	100		450	36,486
BAS	1,275	100		1,275	103,379
FCP	418	25		104	8,432
FEP	144	80		115	9,324
UDU	264	55		145	11,757
UOP	126	20		25	2,027
UOP	320	20		64	5,189
TOTALS	2,997			2,178	176,595

MARKET ADJUSTMENTS

TYPE	MDL	EFF. AREA	TOT ADJ PTS	EFF. BASE RATE	REPL. COST NEW	AYB	EYB	ECON	FNCT		NORM	% COND
0100	01	2,178	111.3750	124.74	271,684	1983	1983	0	0	0	35.00	65.00

1 SINGLE FAM 100% - 0 Heated Area: 1725 HX Base Yr

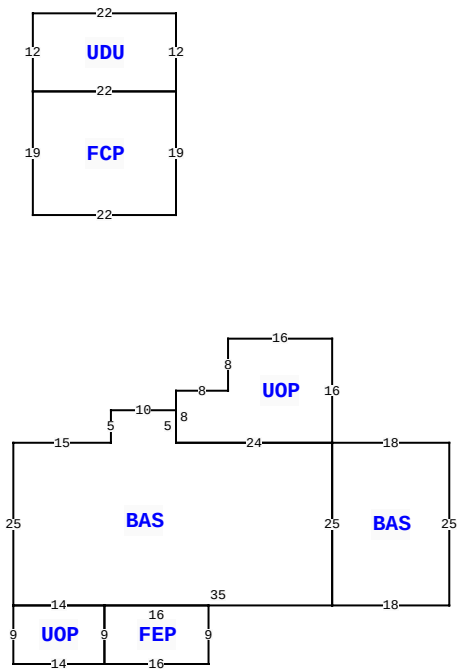

399 SW COUNTY ROAD 138 , FORT WHITE

BLD DATE		LGL DATE	
XF DATE		LAND DATE	04/07/2025 MLU
INC DATE		AG DATE	

VALUATION SUMMARY

VALUATION BY		STANDARD
Tax Group: 3	Tax Dist:	
BUILDING MARKET VALUE		176,595
TOTAL MARKET OB/XF VALUE		0
TOTAL LAND VALUE - MARKET		33,740
TOTAL MARKET VALUE		210,335
SOH/AGL Deduction		99,378
ASSESSED VALUE		110,957
TOTAL EXEMPTION VALUE	HX HB SX	100,722
BASE TAXABLE VALUE		10,235
TOTAL JUST VALUE		210,335
NCON VALUE		0
INCOME VALUE		
PREVIOUS YEAR MKT VALUE		210,335

PERMIT NUM	DESCRIPTION	AMT	ISSUED
40163	REMODEL	0	07/16/2020
23118	ADDN SFR	169	05/09/2005

SALES DATA

OFF RECORD Number	DATE	TYPE INST	Q U /	V I /	RSN CD	SALE PRICE
1436/1029	4/29/2021	LE	U	I	14	100

GRANTOR: MCKINZEY DAVID A

GRANTEE: MCKINZEY MICHAEL DA

BUILDING NOTES

BUILDING DIMENSIONS

BAS= W10 S5 W15 S25 UOP= S9E14 N9 W14$ E14 FEP= S9 E16 N9 W16$ E35 BAS= E18 N25 W18 S25$ N25 UOP= N16 W16 S8 W8 S8 E24$ W24 N5$ PTR=N30 FCP= N19 UDU= N12 W22 S12 E22$ W22 S19 E22$ S30$.

EXTRA FEATURES

L N	OB/XF CODE	DESCRIPTION	BLD	CAP	L	W	UNITS	UT	Adj R	ADJ UNIT PRICE	ORIG COND	YEAR ON	YEAR ACTUAL	Q	% COND	OB/XF MKT VALUE	NOTES

LAND DESCRIPTION

TOTAL OB/XF 0

L N	USE CODE	CLS	LAND USE DESCRIPTION	CAP	R D	LOC ZONE	FRONT	DEPTH	TOT LND UTS	UNIT TYPE	D T	DPTH FACT	% COND	TOT ADJ	UNIT PRICE	ADJ UNIT PRICE	LAND VALUE	OTHER ADJUSTMENTS AND NOTES	YEAR	DENSITY	DECL	FRZ	YR	CONSRV
1	0100	C	SFR	100		00	0.00	0.00	2.41	AC		1.00	1.00	1.00	14,000.00	14,000.00	33,740							

REVIEW DATE 08/25/2020 BY BC Total Acres: 2.41 Total Land Value: 33,740 Market: 0 Agricultural: 0 Common: 33,740 PRINTED 11/06/2025 BY SYS