LOT 62 SANTE FE RIVER PLANTATION
REPLAT OF LOT 38, 45 & 46.

M&C HAYWOOD REVOCABLE TRUST/
1125 SW MAPLETON ST
FORT WHITE, FL 32038

2026

30-7S-17-10058-652

COLUMBIA COUNTY PROPERTY

BUILDING CHARACTERISTICS

ELEMENT	CD	CONSTRUCTION
Exterior Wall	32	HARDIE BRD 100
Roof Structur	04	WOOD TRUSS 100
Roof Cover	14	PREFIN MT 100
Interior Wall	05	DRYWALL 100
Interior Floo	11	CLAY TILE 90
Interior Floo	08	SHT VINYL 10
Air Condition	03	CENTRAL 100
Heating Type	04	AIR DUCTED 100
Bedrooms		3 100
Bathrooms		2 100
Frame	02	WOOD FRAME 100
Stories	1.	1. 100
Units		0 100
Quality	07	07

DOR CODE 0100 SINGLE FAMILY
MAP NUM | MKT AREA 02
NEIGHBORHOOD/LOC 30717.010 1.00/

AREA TYPE	TOTAL GROSS AREA	PCT OF BASE	YEAR	TOT ADJ AREA	SUBAREA MARKET VALUE
APT	467	100		467	66,413
BAS	2,049	100		2,049	291,393
FOP	78	30		23	3,271
FOP	124	30		37	5,262
FOP	143	30		43	6,115
FOP	330	30		99	14,079
UGR	1,368	45		616	87,603
TOTALS	4,559			3,334	474,137

MARKET ADJUSTMENTS

TYPE	MDL	EFF. AREA	TOT ADJ PTS	EFF. BASE RATE	REPL. COST NEW	AYB	EYB	ECON	FNCT		NORM	% COND
0100	01	3,334	135.0822	151.29	504,401	2019	2019	0	0	0	6.00	94.00

1 SINGLE FAM 100% - 2020 Heated Area: 2516 HX Base Yr 2020

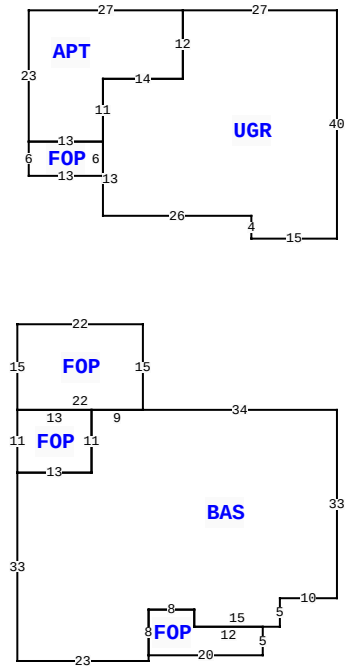

1125 SW MAPLETON ST, FORT WHITE

BLD DATE		LGL DATE	
XF DATE		LAND DATE	04/21/2022 MLU
INC DATE		AG DATE	

VALUATION SUMMARY

VALUATION BY		STANDARD
Tax Group: 3	Tax Dist:	
BUILDING MARKET VALUE		474,137
TOTAL MARKET OB/XF VALUE		0
TOTAL LAND VALUE - MARKET		31,460
TOTAL MARKET VALUE		505,597
SOH/AGL Deduction		285,354
ASSESSED VALUE		220,243
TOTAL EXEMPTION VALUE	HX HB	50,722
BASE TAXABLE VALUE		169,521
TOTAL JUST VALUE		505,597
NCON VALUE		0
INCOME VALUE		
PREVIOUS YEAR MKT VALUE		510,641

SALE:1:1: LOT 62 SANTA FE RIV PLAN;ADJOINING LANDO

PERMIT NUM	DESCRIPTION	AMT	ISSUED
40593	ADDN SFR	0	09/24/2020
37903	TR/TRAILER	0	03/25/2019
37232	SFR	816	09/19/2018
37233	GARAGE	268	09/19/2018

SALES DATA

OFF RECORD Number	DATE	TYPE INST	Q / U	V / I	RSN CD	SALE PRICE
1383/0305	4/16/2019	WD	U	V	30	100
GRANTOR: MATTHEW LEE & CHEREEN						
GRANTEE: MATTHEW L & CHEREE						
1118/0893	5/01/2007	WD	U	V	08	81,500
GRANTOR: JORGE & ELIZABETH THO						
GRANTEE: MATTHEW & CHEREENE						

BUILDING NOTES

BUILDING DIMENSIONS

BAS=[ORIG=0,0] W34 W9 S11 W13 S33 E23 N1 N8 E8 S3 E15 N5 E10 N33 $
UGR=[ORIG=0,-30] N40 W27 S12 W14 S11 S13 E26 S4 E15 $
APT=[ORIG=-27,-70] W27 S23 E13 N11 E14 N12 $
FOP=[ORIG=-34,0] N15 W22 S15 E22 $
FOP=[ORIG=-43,0] W13 S11 E13 N11 $
FOP=[ORIG=-33,43] E20 N5 W12 N3 W8 S8 $
FOP=[ORIG=-41,-47] W13 S6 E13 N6 $.

EXTRA FEATURES

LN	OB/XF CODE	DESCRIPTION	BLD	CAP	L	W	UNITS	UT	Adj R	ADJ UNIT PRICE	ORIG COND	YEAR ON	YEAR ACTUAL	Q	% COND	OB/XF MKT VALUE	NOTES

LAND DESCRIPTION

TOTAL OB/XF 0

LN	USE CODE	CLS	LAND USE DESCRIPTION	CAP	RD	LOC ZONE	FRONT	DEPTH	TOT LND UTS	UNIT TYPE	DT	DPTH FACT	% COND	TOT ADJ	UNIT PRICE	ADJ UNIT PRICE	LAND VALUE	OTHER ADJUSTMENTS AND NOTES	YEAR	DENSITY	DECL	FRZ	YR	CONSRV
1	0100	C	SFR	100		00	0.00	0.00	1.43	AC		1.00	1.00	1.00	22,000.00	22,000.00	31,460							

REVIEW DATE 12/01/2020 BY HC Total Acres: 1.43 Total Land Value: 31,460 Market: 0 Agricultural: 0 Common: 31,460 PRINTED 11/07/2025 BY SYS