LOT 19 WESTER WOODS S/D.
WD 1021-666,WD 1252-2548

LARSEN MARIANNE/HERRERA JOSE A
324 SW NIGHTSHADE DR
LAKE CITY, FL 32024

2026

30-4S-17-08898-119

COLUMBIA COUNTY PROPERTY

BUILDING CHARACTERISTICS

ELEMENT	CD	CONSTRUCTION
Exterior Wall	32	HARDIE BRD 90
Exterior Wall	16	WD FR STUC 10
Roof Structur	03	GABLE/HIP 100
Roof Cover	03	COMP SHNGL 100
Interior Wall	05	DRYWALL 100
Interior Floo	14	CARPET 70
Interior Floo	15	HARDTILE 30
Air Condition	03	CENTRAL 100
Heating Type	04	AIR DUCTED 100
Bedrooms		4 100
Bathrooms		4 100
Frame	02	WOOD FRAME 100
Stories	1.	1. 100
Architectual	05	CONV 100
Units		0 100
Condition Adj	03	03 100
Kitchen Adjus	01	01 100
Quality	06	06
DOR CODE	0100	SINGLE FAMILY
MAP NUM		MKT AREA 06
NEIGHBORHOOD/LOC	30417.020	1.00/

AREA TYPE	TOTAL GROSS AREA	PCT OF BASE	YEAR	TOT ADJ AREA	SUBAREA MARKET VALUE
BAS	2,228	100		2,228	230,294
FGR	484	55		266	27,494
FGR	784	55		431	44,550
FOP	140	30		42	4,341
FOP	140	30		42	4,341
FOP	210	30		63	6,512
FOP	247	30		74	7,649
FUS	192	100		192	19,846
FUS	556	100		556	57,470
TOTALS	4,981			3,894	402,498

MARKET ADJUSTMENTS

TYPE	MDL	EFF. AREA	TOT ADJ PTS	EFF. BASE RATE	REPL. COST NEW	AYB	EYB	ECON	FNCT		NORM	% COND
0100	01	3,894	116.8220	130.84	509,491	2005	2005	0	0	0	21.00	79.00

1 SINGLE FAM 100% - 2014 Heated Area: 2976 HX Base Yr 2014

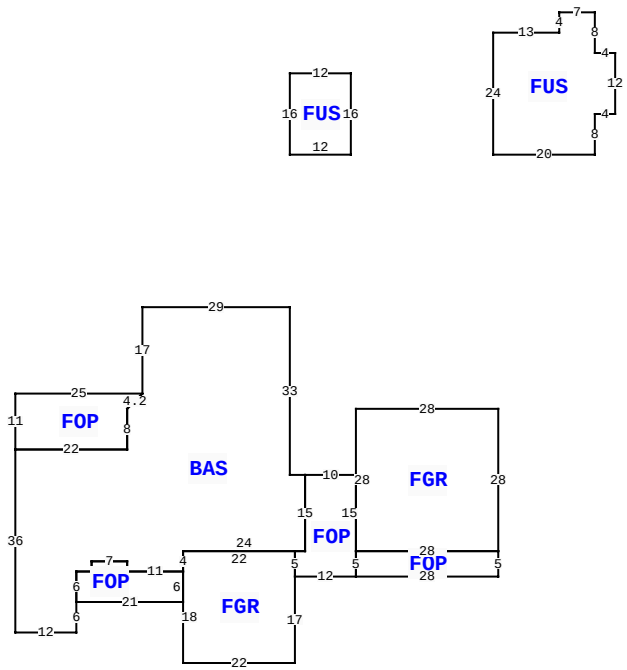

324 SW NIGHTSHADE DR, LAKE CITY

BLD DATE		LGL DATE	
XF DATE		LAND DATE	04/03/2025 MLU
INC DATE		AG DATE	

VALUATION SUMMARY

VALUATION BY		STANDARD
Tax Group: 2	Tax Dist:	
BUILDING MARKET VALUE		402,498
TOTAL MARKET OB/XF VALUE		15,343
TOTAL LAND VALUE - MARKET		35,000
TOTAL MARKET VALUE		452,841
SOH/AGL Deduction		147,586
ASSESSED VALUE		305,255
TOTAL EXEMPTION VALUE	HX HB	50,722
BASE TAXABLE VALUE		254,533
TOTAL JUST VALUE		452,841
NCON VALUE		0
INCOME VALUE		
PREVIOUS YEAR MKT VALUE		459,226

PERMIT NUM	DESCRIPTION	AMT	ISSUED
29248	GARAGE	481	03/17/2011
23472	POOL	130	08/08/2005
22131	SFR	733	07/26/2004

SALES DATA

OFF RECORD Number	DATE	TYPE INST	Q U	V I	RSN CD	SALE PRICE
1252/2548	4/12/2013	WD	Q	I	01	285,000
GRANTOR: ANDREW P & SARAH R SC						
GRANTEE: MARIANNE LARSEN & J						
1021/0666	7/09/2004	WD	Q	V	01	24,500
GRANTOR: PAUL BRYAN						
GRANTEE: ANDREW P SCHNEIDER						

BUILDING NOTES

BUILDING DIMENSIONS

BAS= W29 S17 FOP= W25 S11 E22 N8 R3 U3 $ D3 L3 S8 W22 S36 E12 N6 FOP= E21 N6 W11 N2 W7 S2 W3 S6$ N6 E3 N2 E7 S2 E11 FGR= S18 E22 N17 FOP= E12 FOP= E28 N5 W28 S5$ N5 FGR= E28 N28 W28 S28 $ N15 W10 S15 W2 S5$ N5 W22 S4 $ N4 E24 N15 W3 N33$ PTR= N30 FUS= E12 N16 W12 S16$ S30$ PTR= N30 E40 FUS= E20 N8 E4 N12 W4 N8 W7 S4 W13 S24$ S30 W40$.

EXTRA FEATURES

LN	OB/XF CODE	DESCRIPTION	BLD	CAP	L	W	UNITS	UT	Adj R	ADJ UNIT PRICE	ORIG COND	YEAR ON	YEAR ACTUAL	Q	% COND	OB/XF MKT VALUE	NOTES
1	0169	FENCE/WOOD	0	100	0	0	360.00	UT	7.50	7.50	50	2005	2005	3	50	1,350	
2	0280	POOL R/CON	0	100	15	29	435.00	UT	59.50	59.50	100	2005	2005	3	47	12,165	
3	0166	CONC,PAVMT	0	100	0	0	2,151.00	UT	0.85	0.85	100	2005	2005	3	100	1,828	

LAND DESCRIPTION

TOTAL OB/XF 15,343

LN	USE CODE	CLS	LAND USE DESCRIPTION	CAP	RD	LOC ZONE	FRONT	DEPTH	TOT LND UTS	UNIT TYPE	DT	DPTH FACT	% COND	TOT ADJ	UNIT PRICE	ADJ UNIT PRICE	LAND VALUE	OTHER ADJUSTMENTS AND NOTES	YEAR	DENSITY	DECL	FRZ	YR	CONSRV
1	0100	C	SFR	100		RSF-1	0.00	0.00	1.00	LT		1.00	1.00	1.00	35,000.00	35,000.00	35,000							

REVIEW DATE 07/05/2017 BY DF Total Acres: 1.01 Total Land Value: 35,000 Market: 0 Agricultural: 0 Common: 35,000 PRINTED 11/17/2025 BY SYS