LOT 3 WESTER WOODS, PHASE 1.
WD 1044-332, WD 1076-402, WD 124

STEWART ROBERT/STEWART ELLEN
135 SW NIGHTSHADE DR
LAKE CITY, FL 32024

2026

30-4S-17-08898-103

COLUMBIA COUNTY PROPERTY

BUILDING CHARACTERISTICS

ELEMENT	CD	CONSTRUCTION
Exterior Wall	32	HARDIE BRD 90
Exterior Wall	19	COMMON BRK 10
Roof Structur	03	GABLE/HIP 100
Roof Cover	03	COMP SHNGL 100
Interior Wall	05	DRYWALL 100
Interior Floo	14	CARPET 90
Interior Floo	15	HARDTILE 10
Air Condition	03	CENTRAL 100
Heating Type	04	AIR DUCTED 100
Bedrooms		3 100
Bathrooms		2 100
Frame	02	WOOD FRAME 100
Stories	1.	1. 100
Architectual	05	CONV 100
Units		0 100
Condition Adj	03	03 100
Kitchen Adjus	01	01 100
Quality	06	06
DOR CODE	0100	SINGLE FAMILY
MAP NUM		MKT AREA 06
NEIGHBORHOOD/LOC	30417.020	1.00/

AREA TYPE	TOTAL GROSS AREA	PCT OF BASE	YEAR	TOT ADJ AREA	SUBAREA MARKET VALUE
BAS	1,705	100		1,705	178,330
FGR	410	55		226	23,638
FOP	42	30		13	1,360
FOP	126	30		38	3,974
PTO	1,350	5		68	7,112
TOTALS	3,633			2,050	214,414

MARKET ADJUSTMENTS

TYPE	MDL	EFF. AREA	TOT ADJ PTS	EFF. BASE RATE	REPL. COST NEW	AYB	EYB	ECON	FNCT		NORM	% COND
0100	01	2,050	116.7358	130.74	268,017	2005	2005	0	0	0	20.00	80.00

1 SINGLE FAM 100% - 2013 Heated Area: 1705 HX Base Yr 2013

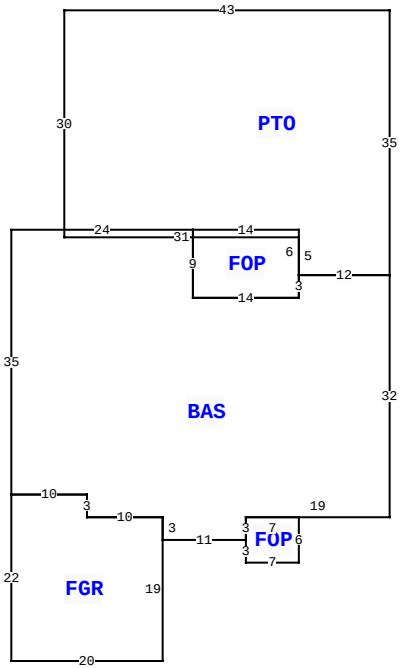

135 SW NIGHTSHADE DR, LAKE CITY

BLD DATE		LGL DATE	
XF DATE		LAND DATE	04/03/2025 MLU
INC DATE		AG DATE	

VALUATION SUMMARY

VALUATION BY		STANDARD
Tax Group: 2	Tax Dist:	
BUILDING MARKET VALUE		214,414
TOTAL MARKET OB/XF VALUE		4,125
TOTAL LAND VALUE - MARKET		35,000
TOTAL MARKET VALUE		253,539
SOH/AGL Deduction		84,578
ASSESSED VALUE		168,961
TOTAL EXEMPTION VALUE	HX HB	50,722
BASE TAXABLE VALUE		118,239
TOTAL JUST VALUE		253,539
NCON VALUE		0
INCOME VALUE		
PREVIOUS YEAR MKT VALUE		256,219

PERMIT NUM	DESCRIPTION	AMT	ISSUED
000043968	Roof Replacement	14,880	03/21/2022
23167	SFR	538	05/18/2005

SALES DATA

OFF RECORD Number	DATE	TYPE INST	Q U /	V I /	RSN CD	SALE PRICE
1247/0504	12/27/2012	WD	U	I	37	38,000
GRANTOR: LINDA WALSER						
GRANTEE: ROBERT & ELLEN STEW						
1241/1328	9/10/2012	WD	U	I	37	38,000
GRANTOR: ROBERT & ELLEN STEWAR						
GRANTEE: LINDA WALSER						

BUILDING NOTES

BUILDING DIMENSIONS

BAS= W12 FOP= N6 W14 S9 E14 N3$ S3 W14 N9 W24 S35 FGR= S22 E20 N19 W10 N3 W10 $ E10 S3 E10 S3 E11 FOP= S3 E7 N6 W7 S3$ N3 E19 N32$ PTO= N35 W43 S30 E31 S5 E12 $.

EXTRA FEATURES

LN	OB/XF CODE	DESCRIPTION	BLD	CAP	L	W	UNITS	UT	Adj R	ADJ UNIT PRICE	ORIG COND	YEAR ON	YEAR ACTUAL	Q	% COND	OB/XF MKT VALUE	NOTES
1	0166	CONC,PAVMT	0	100	0	0	1,650.00	UT	2.50	2.50	100	2005	2005	3	100	4,125	

LAND DESCRIPTION

TOTAL OB/XF 4,125

LN	USE CODE	CLS	LAND USE DESCRIPTION	CAP	RD	LOC ZONE	FRONT	DEPTH	TOT LND UTS	UNIT TYPE	DT	DPTH FACT	% COND	TOT ADJ	UNIT PRICE	ADJ UNIT PRICE	LAND VALUE	OTHER ADJUSTMENTS AND NOTES	YEAR	DENSITY	DECL	FRZ	YR	CONSRV
1	0100	C	SFR	100		RSF-1	0.00	0.00	1.00	LT		1.00	1.00	1.00	35,000.00	35,000.00	35,000							

REVIEW DATE 07/05/2017 BY DF Total Acres: 1.25 Total Land Value: 35,000 Market: 0 Agricultural: 0 Common: 35,000 PRINTED 11/18/2025 BY SYS