LOT 2 BLOCK 3 HIGHLANDS S/D.

306-137, 308-548, 631-292, 805-2

MORRIS CHANI C
1400 NW RICKETSON GLN
LAKE CITY, FL 32055

2026

30-3S-17-05905-000

COLUMBIA COUNTY PROPERTY

BUILDING CHARACTERISTICS

ELEMENT	CD	CONSTRUCTION
Exterior Wall	15	CONC BLOCK 70
Exterior Wall	06	BD/BATTEN 30
Roof Structur	03	GABLE/HIP 100
Roof Cover	03	COMP SHNGL 100
Interior Wall	05	DRYWALL 100
Interior Floo	14	CARPET 90
Interior Floo	06	VINYL ASB 10
Air Condition	03	CENTRAL 100
Heating Type	04	AIR DUCTED 100
Bedrooms		3 100
Bathrooms		1 100
Frame	01	NONE 100
Stories	1.	1. 100
Architectual	05	CONV 100
Units		0 100
Condition Adj	02	02 100
Kitchen Adjus	01	01 100
Quality	05	05

DOR CODE	0100	SINGLE FAMILY	
MAP NUM		MKT AREA	06
NEIGHBORHOOD/LOC	30317.020	1.00/	

AREA TYPE	TOTAL GROSS AREA	PCT OF BASE	YEAR	TOT ADJ AREA	SUBAREA MARKET VALUE
BAS	144	100		144	9,829
BAS	1,124	100		1,124	76,720
FCP	300	25		75	5,119
FOP	72	30		22	1,502
FSP	160	40		64	4,369
FST	120	55		66	4,505
UDG	384	55		211	14,402
TOTALS	2,304			1,706	116,446

MARKET ADJUSTMENTS

TYPE	MDL	EFF. AREA	TOT ADJ PTS	EFF. BASE RATE	REPL. COST NEW	AYB	EYB	ECON	FNCT		NORM	% COND
0100	01	1,706	93.7566	105.01	179,147	1966	1966	0	0	0	35.00	65.00

1 SINGLE FAM 0% - 2025 Heated Area: 1268 HX Base Yr

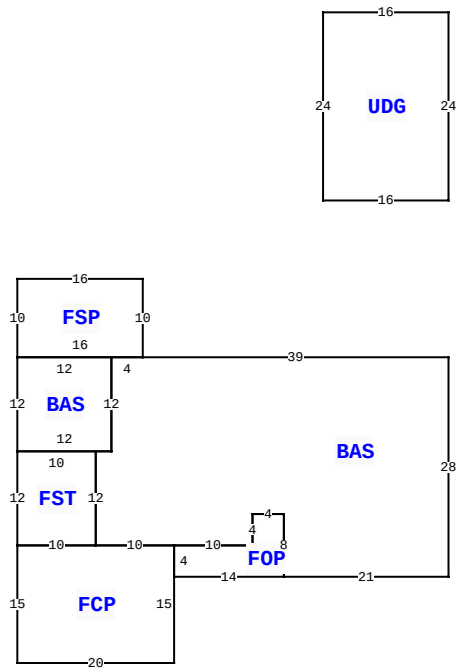

900 NW LOWLAND TER, LAKE CITY

BLD DATE		LGL DATE	
XF DATE		LAND DATE	04/27/2022 MLU
INC DATE		AG DATE	

VALUATION SUMMARY

VALUATION BY	STANDARD
Tax Group: 1	Tax Dist:
BUILDING MARKET VALUE	116,446
TOTAL MARKET OB/XF VALUE	900
TOTAL LAND VALUE - MARKET	8,600
TOTAL MARKET VALUE	125,946
SOH/AGL Deduction	0
ASSESSED VALUE	125,946
TOTAL EXEMPTION VALUE	0
BASE TAXABLE VALUE	125,946
TOTAL JUST VALUE	125,946
NCON VALUE	0
INCOME VALUE	
PREVIOUS YEAR MKT VALUE	125,946

PERMIT NUM	DESCRIPTION	AMT	ISSUED

SALES DATA

OFF RECORD Number	DATE	TYPE INST	Q U	V I	RSN CD	SALE PRICE
1328/0142	12/22/2016	WD	Q	I	01	59,500
GRANTOR: JOHN PIERCE						
GRANTEE: CHANI C MORRIS						
1198/2103	7/26/2010	WD	U	I	12	49,500
GRANTOR: CAMPUS USA CREDIT UNI						
GRANTEE: JOHN PIERCE						

BUILDING NOTES

BUILDING DIMENSIONS

BAS= W39 FSP= N10 W16 S10 E16$ W4 BAS= W12 S12 E12 N12$S12 W2 FST= W10 S12 E10 N12$ S12 FCP= W10 S15 E20 N15 W10$E10FOP= S4 E14 N8 W4 S4 W10$ E10 N4 E4 S8 E21 N28$ PTR= N20 UDG= N24 W16 S24 E16$ S20$.

EXTRA FEATURES

L N	OB/XF CODE	DESCRIPTION	BLD	CAP	L	W	UNITS	UT	Adj R	ADJ UNIT PRICE	ORIG COND	YEAR ON	YEAR ACTUAL	Q	% COND	OB/XF MKT VALUE	NOTES
1	0166	CONC,PAVMT	0	0	0	0	1.00	UT	0.00	0.00	100	0	0	3	100	600	
2	0120	CLFENCE 4	0	0	0	0	1.00	UT	0.00	0.00	100	1993	1993	3	100	300	

LAND DESCRIPTION

TOTAL OB/XF 900

L N	USE CODE	CLS	LAND USE DESCRIPTION	CAP	R D	LOC ZONE	FRONT	DEPTH	TOT LND UTS	UNIT TYPE	D T	DPTH FACT	% COND	TOT ADJ	UNIT PRICE	ADJ UNIT PRICE	LAND VALUE	OTHER ADJUSTMENTS AND NOTES	YEAR	DENSITY	DECL	FRZ	YR	CONSRV
1	0100	C	SFR	0		00	0.00	0.00	9,052.50	SF		1.00	1.00	1.00	0.95	0.95	8,600							

REVIEW DATE 11/03/2015 BY DF Total Acres: 0.21 Total Land Value: 8,600 Market: 0 Agricultural: 0 Common: 8,600 PRINTED 11/19/2025 BY SYS