LOT 11 BLOCK 2 HIGHLANDS S/D.
221-259, DC 1404-108, LE 1405-20

WITT CLAUDIA S
283 SW GENT GLN
LAKE CITY, FL 32024

2026

30-3S-17-05894-000

COLUMBIA COUNTY PROPERTY

BUILDING CHARACTERISTICS

ELEMENT	CD	CONSTRUCTION
Exterior Wall	15	CONC BLOCK 100
Roof Structur	03	GABLE/HIP 100
Roof Cover	03	COMP SHNGL 100
Interior Wall	05	DRYWALL 100
Interior Floo	14	CARPET 100
Air Condition	03	CENTRAL 100
Heating Type	04	AIR DUCTED 100
Bedrooms		3 100
Bathrooms		2 100
Frame	01	NONE 100
Stories	1.	1. 100
Architectual	05	CONV 100
Units		0 100
Condition Adj	03	03 100
Kitchen Adjus	01	01 100
Quality	05	05
DOR CODE	0100	SINGLE FAMILY
MAP NUM		MKT AREA 06
NEIGHBORHOOD/LOC	30317.020	1.00/

AREA TYPE	TOTAL GROSS AREA	PCT OF BASE	YEAR	TOT ADJ AREA	SUBAREA MARKET VALUE
BAS	1,176	100		1,176	98,455
FCP	240	25		60	5,023
FOP	32	30		10	837
FST	72	55		40	3,349
UDU	299	55		164	13,730
TOTALS	1,819			1,450	121,394

MARKET ADJUSTMENTS

TYPE	MDL	EFF. AREA	TOT ADJ PTS	EFF. BASE RATE	REPL. COST NEW	AYB	EYB	ECON	FNCT		NORM	% COND
0100	01	1,450	115.0000	128.80	186,760	1964	1964	0	0	0	35.00	65.00

1 SINGLE FAM 0% - 2023 Heated Area: 1176 HX Base Yr

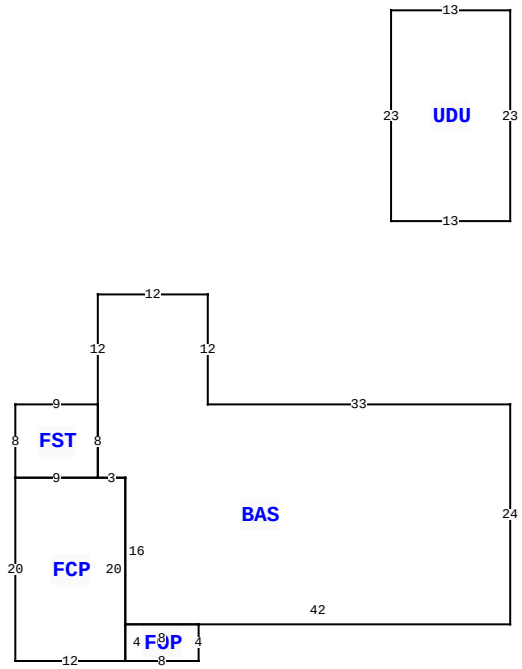

937 NW INDIAN SHORE DR, LAKE CITY

BLD DATE		LGL DATE	
XF DATE		LAND DATE	04/27/2022 MLU
INC DATE		AG DATE	

VALUATION SUMMARY

VALUATION BY	STANDARD
Tax Group: 1	Tax Dist:
BUILDING MARKET VALUE	121,394
TOTAL MARKET OB/XF VALUE	2,700
TOTAL LAND VALUE - MARKET	9,494
TOTAL MARKET VALUE	133,588
SOH/AGL Deduction	0
ASSESSED VALUE	133,588
TOTAL EXEMPTION VALUE	0
BASE TAXABLE VALUE	133,588
TOTAL JUST VALUE	133,588
NCON VALUE	0
INCOME VALUE	
PREVIOUS YEAR MKT VALUE	133,588

PERMIT NUM	DESCRIPTION	AMT	ISSUED

SALES DATA

OFF RECORD Number	DATE	TYPE INST	Q U	V I	RSN CD	SALE PRICE
1405/2019	2/11/2020	LE	U	I	14	100
GRANTOR: PAUL A SPOHN (ENH LIF						
GRANTEE: CLAUDIA S WITT (RMD						
0221/0259	4/27/1967	WD	Q	I	01	7,236
GRANTOR: CHARLES E & MAXINE CA						
GRANTEE: PAUL A & ERIKA M SP						

BUILDING NOTES

BUILDING DIMENSIONS

BAS= W33 N12 W12 S12 FST= W9S8 E9 N8$ S8 FCP= W9 S20 E12 N20 W3$ E3 S16 FOP= S4 E8 N4 W8$ E42 N24$ PTR=N20 UDU= N23 W13 S23 E13$ S20$.

EXTRA FEATURES

LN	OB/XF CODE	DESCRIPTION	BLD	CAP	L	W	UNITS	UT	Adj R	ADJ UNIT PRICE	ORIG COND	YEAR ON	YEAR ACTUAL	Q	% COND	OB/XF MKT VALUE	NOTES
1	0120	CLFENCE 4	0	0	0	0	1.00	UT	0.00	0.00	100	1993	1993	3	100	300	
2	0166	CONC,PAVMT	0	0	0	0	1.00	UT	0.00	0.00	100	1993	1993	3	100	400	
3	0296	SHED METAL	0	0	9	18	1.00	UT	0.00	0.00	100	1993	1993	3	100	400	
4	0060	CARPORT F	0	0	0	0	1.00	UT	0.00	0.00	100	2003	2003	3	100	1,500	
5	0166	CONC,PAVMT	0	0	0	0	1.00	UT	0.00	0.00	100	2011	2011	3	100	100	

LAND DESCRIPTION

TOTAL OB/XF 2,700

LN	USE CODE	CLS	LAND USE DESCRIPTION	CAP	RD	LOC ZONE	FRONT	DEPTH	TOT LND UTS	UNIT TYPE	DT	DPTH FACT	% COND	TOT ADJ	UNIT PRICE	ADJ UNIT PRICE	LAND VALUE	OTHER ADJUSTMENTS AND NOTES	YEAR	DENSITY	DECL	FRZ	YR	CONSRV
1	0100	C	SFR	0		00	0.00	0.00	9,994.03	SF		1.00	1.00	1.00	0.95	0.95	9,494							

REVIEW DATE 11/03/2015 BY DF Total Acres: 0.23 Total Land Value: 9,494 Market: 0 Agricultural: 0 Common: 9,494 PRINTED 11/19/2025 BY SYS