COMM NE COR, S 605.90 FT FOR POB
FT, W 100 FT, S 50 FT, W 237 FT
RR, NW ALONG R/W 369.35 FT, N 37

SP PARK LLC
31899 DEL OBISOP SUITE 150, C/O STANDARD CEDAR PARK MANA
SAN JUAN CAPISTRANO, CA 92675

2026

30-3S-17-05832-000

COLUMBIA COUNTY PROPERTY

BUILDING CHARACTERISTICS

ELEMENT	CD	CONSTRUCTION
Exterior Wall	19	COMMON BRK 100
Roof Structur	03	GABLE/HIP 100
Roof Cover	03	COMP SHNGL 100
Interior Wall	05	DRYWALL 100
Interior Floo	07	CORK/VTILE 100
Air Condition	02	WINDOW 100
Heating Type	04	AIR DUCTED 100
Bedrooms		2 100
Bathrooms		1 100
Frame	02	WOOD FRAME 100
Story Height		8 100
RMS		0 100
Stories	2.	2. 100
Units		12 100
Condition Adj	02	02 100
Kitchen Adjus	01	01 100
Quality	03	03
DOR CODE	0300	MULTI-FAM 10+
MAP NUM		MKT AREA 06
NEIGHBORHOOD/LOC	30317.00	1.00/

AREA TYPE	TOTAL GROSS AREA	PCT OF BASE	YEAR	TOT ADJ AREA	SUBAREA MARKET VALUE
BAS	5,320	100		5,320	140,182
FOP	104	30		31	817
FOP	104	30		31	817
FOP	104	30		31	817
FOP	104	30		31	817
FOP	104	30		31	817
FOP	104	30		31	817
FUS	5,320	100		5,320	140,182
UST	112	45		50	1,318
UST	112	45		50	1,318
TOTALS	11,488			10,926	287,900

MARKET ADJUSTMENTS

TYPE	MDL	EFF. AREA	TOT ADJ PTS	EFF. BASE RATE	REPL. COST NEW	AYB	EYB	ECON	FNCT		NORM	% COND
2200	03	10,926	85.0014	52.70	575,800	1968	1968	0	0	0	50.00	50.00

1 M/FAM LOW 0% - 2018 Heated Area: 10640 HX Base Yr

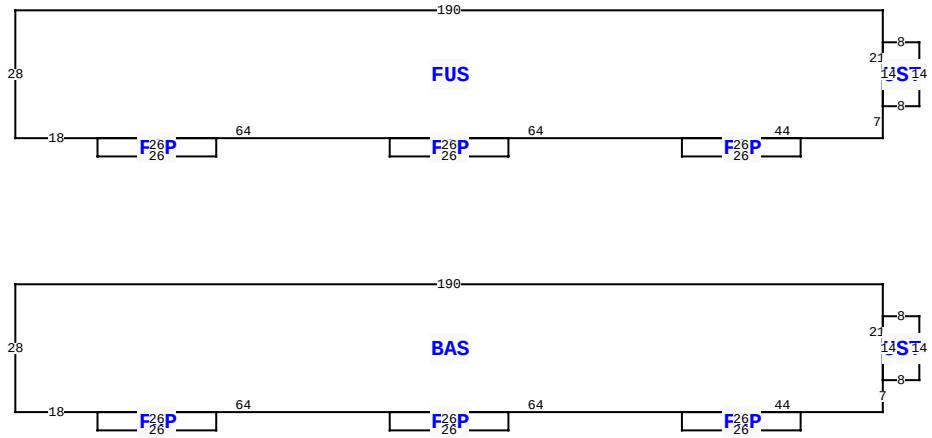

375 NW BASCOM NORRIS DR, LAKE CITY

BLD DATE		LGL DATE	
XF DATE		LAND DATE	
INC DATE		AG DATE	

VALUATION SUMMARY

VALUATION BY		STANDARD
Tax Group: 1	Tax Dist:	
BUILDING MARKET VALUE		1,998,798
TOTAL MARKET OB/XF VALUE		51,972
TOTAL LAND VALUE - MARKET		240,000
TOTAL MARKET VALUE		2,290,770
SOH/AGL Deduction		146,673
ASSESSED VALUE		2,144,097
TOTAL EXEMPTION VALUE	84	1,813,819
BASE TAXABLE VALUE		330,278
TOTAL JUST VALUE		2,290,770
NCON VALUE		0
INCOME VALUE		
PREVIOUS YEAR MKT VALUE		2,291,913

PERMIT NUM	DESCRIPTION	AMT	ISSUED
000047781	Electrical Servic	0	07/28/2023
000047782	Electrical Servic	0	07/28/2023
17-1018	MULTIFAM	0	12/27/2017
17-1022	MULTIFAM	0	12/27/2017
17-1026	MULTIFAM	0	12/27/2017
17-1030	MULTIFAM	0	12/27/2017

SALES DATA

OFF RECORD Number	DATE	TYPE INST	Q U	V I	RSN CD	SALE PRICE
1350/0647	12/19/2017	WD	Q	I	01	4,815,800
GRANTOR: CEDAR PARK LLC						
GRANTEE: SP PARK LLC						
1076/2776	2/23/2006	WD	Q	I		1,625,000
GRANTOR: HAVEN CEDAR PARK LLC						
GRANTEE: CEDAR PARK LLC						

BUILDING NOTES

BUILDING DIMENSIONS

BAS= W190 S28 E18 FOP= S4 E26 N4 W26$ E64 FOP= S4 E26 N4 W26$ E64 FOP= S4 E26 N4 W26$ E44 N7 UST= E8 N14 W8 S14$ N21$ PTR=N60 FUS= W190 S28 E18 FOP= S4 E26 N4 W26$ E64 FOP= S4 E26 N4 W26 $ E64 FOP= S4 E26 N4 W26$ E44 N7 UST= E8 N14 W8 S14$ N21$ S60$.

EXTRA FEATURES

LN	OB/XF CODE	DESCRIPTION	BLD	CAP	L	W	UNITS	UT	Adj R	ADJ UNIT PRICE	ORIG COND	YEAR ON	YEAR ACTUAL	Q	% COND	OB/XF MKT VALUE	NOTES
1	0260	PAVEMENT-A	0	0	0	0	1.00	UT	0.00	0.00	100	0	0	3	100	40,000	
2	0169	FENCE/WOOD	0	0	0	0	1.00	UT	0.00	0.00	100	2018	2018	3	100	1,000	
3	0166	CONC,PAVMT	0	0	0	0	5,486.00	UT	2.00	2.00	100	2018	2018	3	100	10,972	

LAND DESCRIPTION

TOTAL OB/XF 51,972

LN	USE CODE	CLS	LAND USE DESCRIPTION	CAP	RD	LOC ZONE	FRONT	DEPTH	TOT LND UTS	UNIT TYPE	DT	DPTH FACT	% COND	TOT ADJ	UNIT PRICE	ADJ UNIT PRICE	LAND VALUE	OTHER ADJUSTMENTS AND NOTES	YEAR	DENSITY	DECL	FRZ	YR	CONSRV
1	0800	C	MULTI-FAM	0			0.00	0.00	8.00	AC		1.00	1.00	1.00	30,000.00	30,000.00	240,000							

REVIEW DATE 12/02/2024 BY SYS Total Acres: 8.00 Total Land Value: 240,000 Market: 0 Agricultural: 0 Common: 240,000 PRINTED 11/07/2025 BY SYS

COMM NE COR, S 605.90 FT FOR POB
FT, W 100 FT, S 50 FT, W 237 FT
RR, NW ALONG R/W 369.35 FT, N 37

SP PARK LLC
31899 DEL OBISOP SUITE 150, C/O STANDARD CEDAR PARK MANA
SAN JUAN CAPISTRANO, CA 92675

2026

30-3S-17-05832-000

COLUMBIA COUNTY PROPERTY

BUILDING CHARACTERISTICS

ELEMENT	CD	CONSTRUCTION
Exterior Wall	19	COMMON BRK 100
Roof Structur	03	GABLE/HIP 100
Roof Cover	03	COMP SHNGL 100
Interior Wall	05	DRYWALL 100
Interior Floo	07	CORK/VTILE 100
Air Condition	02	WINDOW 100
Heating Type	04	AIR DUCTED 100
Bedrooms		2 100
Bathrooms		1 100
Frame	02	WOOD FRAME 100
Story Height		8 100
RMS		0 100
Stories	2.	2. 100
Units		12 100
Condition Adj	02	02 100
Kitchen Adjus	01	01 100
Quality	03	03
DOR CODE	0300	MULTI-FAM 10+
MAP NUM		MKT AREA 06
NEIGHBORHOOD/LOC	30317.00	1.00/

AREA TYPE	TOTAL GROSS AREA	PCT OF BASE	YEAR	TOT ADJ AREA	SUBAREA MARKET VALUE
BAS	5,320	100		5,320	140,182
FOP	104	30		31	817
FOP	104	30		31	817
FOP	104	30		31	817
FOP	104	30		31	817
FOP	104	30		31	817
FOP	104	30		31	817
FUS	5,320	100		5,320	140,182
UST	112	45		50	1,318
UST	112	45		50	1,318
TOTALS	11,488			10,926	287,900

MARKET ADJUSTMENTS

TYPE	MDL	EFF. AREA	TOT ADJ PTS	EFF. BASE RATE	REPL. COST NEW	AYB	EYB	ECON	FNCT		NORM	% COND
2200	03	10,926	85.0014	52.70	575,800	1968	1968	0	0	0	50.00	50.00

2 M/FAM LOW 0% - 2018 Heated Area: 10640 HX Base Yr

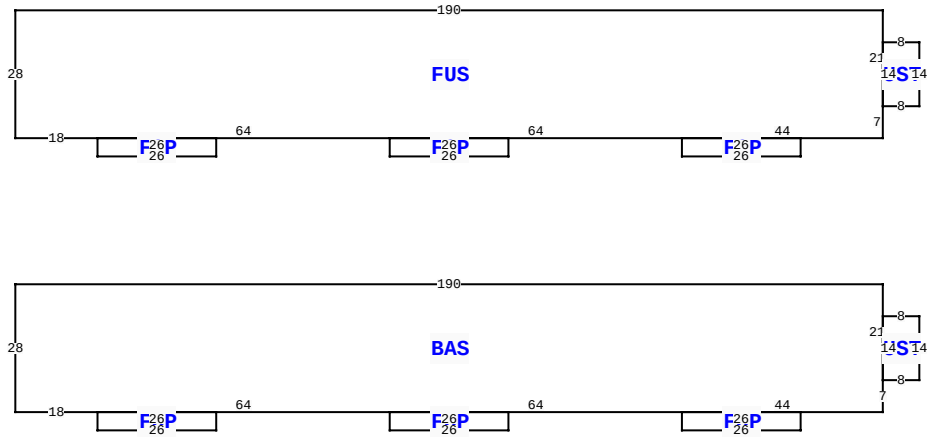

375 NW BASCOM NORRIS DR, LAKE CITY

BLD DATE		LGL DATE	
XF DATE		LAND DATE	
INC DATE		AG DATE	

VALUATION SUMMARY

VALUATION BY		STANDARD
Tax Group: 1	Tax Dist:	
BUILDING MARKET VALUE		1,998,798
TOTAL MARKET OB/XF VALUE		51,972
TOTAL LAND VALUE - MARKET		240,000
TOTAL MARKET VALUE		2,290,770
SOH/AGL Deduction		146,673
ASSESSED VALUE		2,144,097
TOTAL EXEMPTION VALUE	84	1,813,819
BASE TAXABLE VALUE		330,278
TOTAL JUST VALUE		2,290,770
NCON VALUE		0
INCOME VALUE		
PREVIOUS YEAR MKT VALUE		2,291,913

PERMIT NUM	DESCRIPTION	AMT	ISSUED
17-1004	MULTIFAM	0	12/20/2017
17-1005	MULTIFAM	0	12/20/2017
17-1012	MULTIFAM	0	12/20/2017
3714	MAINT/ALTR	85	04/27/2006
3713	MAINT/ALTR	130	04/24/2006
3715	MAINT/ALTR	85	04/24/2006

SALES DATA

OFF RECORD Number	DATE	TYPE INST	Q U	V I	RSN CD	SALE PRICE
1350/0647	12/19/2017	WD	Q	I	01	4,815,800
GRANTOR: CEDAR PARK LLC						
GRANTEE: SP PARK LLC						
1076/2776	2/23/2006	WD	Q	I		1,625,000
GRANTOR: HAVEN CEDAR PARK LLC						
GRANTEE: CEDAR PARK LLC						

BUILDING NOTES

BUILDING DIMENSIONS

BAS= W190 S28 E18 FOP= S4 E26 N4 W26$ E64 FOP= S4 E26 N4 W26$ E64 FOP= S4 E26 N4 W26$ E44 N7 UST= E8 N14 W8 S14$ N21$ PTR= N60 FUS= W190 S28 E18 FOP= S4 E26 N4 W26$ E64 FOP= S4 E26 N4 W26 $ E64 FOP= S4 E26 N4 W26$ E44 N7 UST= E8 N14 W8 S14$ N21$S60$.

EXTRA FEATURES

LN	OB/XF CODE	DESCRIPTION	BLD	CAP	L	W	UNITS	UT	Adj R	ADJ UNIT PRICE	ORIG COND	YEAR ON	YEAR ACTUAL	Q	% COND	OB/XF MKT VALUE	NOTES

LAND DESCRIPTION

TOTAL OB/XF 0

LN	USE CODE	CLS	LAND USE DESCRIPTION	CAP	RD	LOC ZONE	FRONT	DEPTH	TOT LND UTS	UNIT TYPE	DT	DPTH FACT	% COND	TOT ADJ	UNIT PRICE	ADJ UNIT PRICE	LAND VALUE	OTHER ADJUSTMENTS AND NOTES	YEAR	DENSITY	DECL	FRZ	YR	CONSRV

REVIEW DATE 12/02/2024 BY SYS Total Acres: 8.00 Total Land Value: 240,000 Market: 0 Agricultural: 0 Common: 240,000 PRINTED 11/07/2025 BY SYS

COMM NE COR, S 605.90 FT FOR POB
FT, W 100 FT, S 50 FT, W 237 FT
RR, NW ALONG R/W 369.35 FT, N 37

SP PARK LLC
31899 DEL OBISOP SUITE 150, C/O STANDARD CEDAR PARK MANA
SAN JUAN CAPISTRANO, CA 92675

2026

30-3S-17-05832-000

COLUMBIA COUNTY PROPERTY

BUILDING CHARACTERISTICS

ELEMENT	CD	CONSTRUCTION
Exterior Wall	19	COMMON BRK 70
Exterior Wall	08	WD OR PLY 30
Roof Structur	04	WOOD TRUSS 100
Roof Cover	03	COMP SHNGL 100
Interior Wall	05	DRYWALL 100
Interior Floo	14	CARPET 100
Ceiling	02	F.NOT SUS 100
Air Condition	03	CENTRAL 100
Heating Type	04	AIR DUCTED 100
Fixtures		2 100
Frame	02	WOOD FRAME 100
Story Height		8 100
RMS		1 100
Stories	1.	1. 100
Units		0 100
Condition Adj	02	02 100
Quality	03	03
DOR CODE	0300	MULTI-FAM 10+
MAP NUM		MKT AREA 06
NEIGHBORHOOD/LOC	30317.00	1.00/

AREA TYPE	TOTAL GROSS AREA	PCT OF BASE	YEAR	TOT ADJ AREA	SUBAREA MARKET VALUE
AOF	120	110		132	4,016
AOF	240	110		264	8,032
UST	208	40		83	2,526
TOTALS	568			479	14,574

MARKET ADJUSTMENTS

TYPE	MDL	EFF. AREA	TOT ADJ PTS	EFF. BASE RATE	REPL. COST NEW	AYB	EYB	ECON	FNCT		NORM	% COND
4900	04	479	82.2263	60.85	29,147	1968	1968	0	0	0	50.00	50.00

3 OFFICE LOW 0% - 2018 Heated Area: 360 HX Base Yr

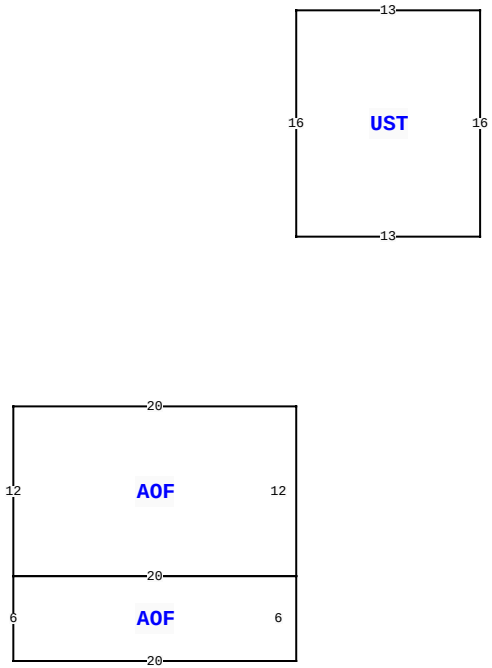

375 NW BASCOM NORRIS DR, LAKE CITY

BLD DATE		LGL DATE	
XF DATE		LAND DATE	
INC DATE		AG DATE	

VALUATION SUMMARY

VALUATION BY		STANDARD
Tax Group: 1	Tax Dist:	
BUILDING MARKET VALUE		1,998,798
TOTAL MARKET OB/XF VALUE		51,972
TOTAL LAND VALUE - MARKET		240,000
TOTAL MARKET VALUE		2,290,770
SOH/AGL Deduction		146,673
ASSESSED VALUE		2,144,097
TOTAL EXEMPTION VALUE	84	1,813,819
BASE TAXABLE VALUE		330,278
TOTAL JUST VALUE		2,290,770
NCON VALUE		0
INCOME VALUE		
PREVIOUS YEAR MKT VALUE		2,291,913

PERMIT NUM	DESCRIPTION	AMT	ISSUED

SALES DATA

OFF RECORD Number	DATE	TYPE INST	Q / U	V / I	RSN CD	SALE PRICE
1350/0647	12/19/2017	WD	Q	I	01	4,815,800
GRANTOR: CEDAR PARK LLC						
GRANTEE: SP PARK LLC						
1076/2776	2/23/2006	WD	Q	I		1,625,000
GRANTOR: HAVEN CEDAR PARK LLC						
GRANTEE: CEDAR PARK LLC						

BUILDING NOTES

BUILDING DIMENSIONS

AOF= N6 AOF= N12 W20 S12 E20$ W20 S6 E20$ PTR=N30 UST= E13 N16 W13 S16$ S30$.

EXTRA FEATURES

L N	OB/XF CODE	DESCRIPTION	BLD	CAP	L	W	UNITS	UT	Adj R	ADJ UNIT PRICE	ORIG COND	YEAR ON	YEAR ACTUAL	Q	% COND	OB/XF MKT VALUE	NOTES

LAND DESCRIPTION

TOTAL OB/XF 0

L N	USE CODE	CLS	LAND USE DESCRIPTION	CAP	R D	LOC ZONE	FRONT	DEPTH	TOT LND UTS	UNIT TYPE	D T	DPTH FACT	% COND	TOT ADJ	UNIT PRICE	ADJ UNIT PRICE	LAND VALUE	OTHER ADJUSTMENTS AND NOTES	YEAR	DENSITY	DECL	FRZ	YR	CONSRV

REVIEW DATE 12/02/2024 BY SYS Total Acres: 8.00 Total Land Value: 240,000 Market: 0 Agricultural: 0 Common: 240,000 PRINTED 11/07/2025 BY SYS

COMM NE COR, S 605.90 FT FOR POB
FT, W 100 FT, S 50 FT, W 237 FT
RR, NW ALONG R/W 369.35 FT, N 37

SP PARK LLC
31899 DEL OBISOP SUITE 150, C/O STANDARD CEDAR PARK MANA
SAN JUAN CAPISTRANO, CA 92675

2026

30-3S-17-05832-000

COLUMBIA COUNTY PROPERTY

BUILDING CHARACTERISTICS

ELEMENT	CD	CONSTRUCTION
Exterior Wall	19	COMMON BRK 100
Roof Structur	03	GABLE/HIP 100
Roof Cover	03	COMP SHNGL 100
Interior Wall	05	DRYWALL 100
Interior Floo	07	CORK/VTILE 100
Air Condition	02	WINDOW 100
Heating Type	04	AIR DUCTED 100
Bedrooms		3 100
Bathrooms		1 100
Frame	02	WOOD FRAME 100
Story Height		8 100
RMS		0 100
Stories	2.	2. 100
Units		12 100
Condition Adj	02	02 100
Kitchen Adjus	01	01 100
Quality	03	03

DOR CODE	0300	MULTI-FAM 10+	
MAP NUM		MKT AREA	06
NEIGHBORHOOD/LOC	30317.00	1.00/	

AREA TYPE	TOTAL GROSS AREA	PCT OF BASE	YEAR	TOT ADJ AREA	SUBAREA MARKET VALUE
BAS	6,020	100		6,020	158,507
FOP	104	30		31	816
FOP	104	30		31	816
FOP	104	30		31	816
FOP	104	30		31	816
FOP	108	30		32	843
FOP	108	30		32	843
FST	104	55		57	1,501
FST	104	55		57	1,501
FUS	6,020	100		6,020	158,507
TOTALS	12,880			12,342	324,965

MARKET ADJUSTMENTS

TYPE	MDL	EFF. AREA	TOT ADJ PTS	EFF. BASE RATE	REPL. COST NEW	AYB	EYB	ECON	FNCT		NORM	% COND
2200	03	12,342	84.9366	52.66	649,930	1968	1968	0	0	0	50.00	50.00

4 M/FAM LOW 0% - 2018 Heated Area: 12040 HX Base Yr

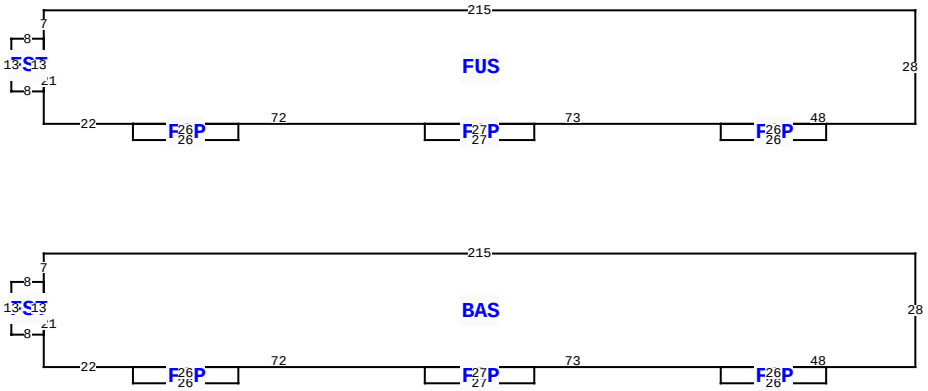

375 NW BASCOM NORRIS DR, LAKE CITY

BLD DATE		LGL DATE	
XF DATE		LAND DATE	
INC DATE		AG DATE	

VALUATION SUMMARY

VALUATION BY		STANDARD
Tax Group: 1	Tax Dist:	
BUILDING MARKET VALUE		1,998,798
TOTAL MARKET OB/XF VALUE		51,972
TOTAL LAND VALUE - MARKET		240,000
TOTAL MARKET VALUE		2,290,770
SOH/AGL Deduction		146,673
ASSESSED VALUE		2,144,097
TOTAL EXEMPTION VALUE	84	1,813,819
BASE TAXABLE VALUE		330,278
TOTAL JUST VALUE		2,290,770
NCON VALUE		0
INCOME VALUE		
PREVIOUS YEAR MKT VALUE		2,291,913

PERMIT NUM	DESCRIPTION	AMT	ISSUED

SALES DATA

OFF RECORD Number	DATE	TYPE INST	Q U	V I	RSN CD	SALE PRICE
1350/0647	12/19/2017	WD	Q	I	01	4,815,800
GRANTOR: CEDAR PARK LLC						
GRANTEE: SP PARK LLC						
1076/2776	2/23/2006	WD	Q	I		1,625,000
GRANTOR: HAVEN CEDAR PARK LLC						
GRANTEE: CEDAR PARK LLC						

BUILDING NOTES

BUILDING DIMENSIONS

BAS= W215 S7 FST= W8 S13 E8N13$ S21 E22 FOP= S4 E26 N4 W26$ E72 FOP= S4 E27 N4 W27$ E73 FOP= S4 E26 N4 W26 $ E48 N28$PTR=N60FUS= W215 S7 FST= W8 S13 E8 N13$ S21 E22 FOP= S4 E26 N4 W26$ E72 FOP= S4 E27 N4 W27$ E73 FOP= S4 E26 N4 W26$ E48 N28 $ S60$.

EXTRA FEATURES

LN	OB/XF CODE	DESCRIPTION	BLD	CAP	L	W	UNITS	UT	Adj R	ADJ UNIT PRICE	ORIG COND	YEAR ON	YEAR ACTUAL	Q	% COND	OB/XF MKT VALUE	NOTES

LAND DESCRIPTION

TOTAL OB/XF 0

LN	USE CODE	CLS	LAND USE DESCRIPTION	CAP	RD	LOC ZONE	FRONT	DEPTH	TOT LND UTS	UNIT TYPE	DT	DPTH FACT	% COND	TOT ADJ	UNIT PRICE	ADJ UNIT PRICE	LAND VALUE	OTHER ADJUSTMENTS AND NOTES	YEAR	DENSITY	DECL	FRZ	YR	CONSRV

REVIEW DATE 12/02/2024 BY SYS Total Acres: 8.00 Total Land Value: 240,000 Market: 0 Agricultural: 0 Common: 240,000 PRINTED 11/07/2025 BY SYS

COMM NE COR, S 605.90 FT FOR POB
FT, W 100 FT, S 50 FT, W 237 FT
RR, NW ALONG R/W 369.35 FT, N 37

SP PARK LLC
31899 DEL OBISOP SUITE 150, C/O STANDARD CEDAR PARK MANA
SAN JUAN CAPISTRANO, CA 92675

2026

30-3S-17-05832-000

COLUMBIA COUNTY PROPERTY

BUILDING CHARACTERISTICS

ELEMENT	CD	CONSTRUCTION
Exterior Wall	19	COMMON BRK 100
Roof Structur	03	GABLE/HIP 100
Roof Cover	03	COMP SHNGL 100
Interior Wall	05	DRYWALL 100
Interior Floo	07	CORK/VTILE 100
Air Condition	02	WINDOW 100
Heating Type	04	AIR DUCTED 100
Bedrooms		3 100
Bathrooms		1 100
Frame	02	WOOD FRAME 100
Story Height		8 100
RMS		0 100
Stories	2.	2. 100
Units		12 100
Condition Adj	02	02 100
Kitchen Adjus	01	01 100
Quality	03	03
DOR CODE	0300	MULTI-FAM 10+
MAP NUM		MKT AREA 06
NEIGHBORHOOD/LOC	30317.00	1.00/

AREA TYPE	TOTAL GROSS AREA	PCT OF BASE	YEAR	TOT ADJ AREA	SUBAREA MARKET VALUE
BAS	6,020	100		6,020	158,507
FOP	104	30		31	816
FOP	104	30		31	816
FOP	104	30		31	816
FOP	104	30		31	816
FOP	108	30		32	843
FOP	108	30		32	843
FST	104	55		57	1,501
FST	104	55		57	1,501
FUS	6,020	100		6,020	158,507
TOTALS	12,880			12,342	324,965

MARKET ADJUSTMENTS

TYPE	MDL	EFF. AREA	TOT ADJ PTS	EFF. BASE RATE	REPL. COST NEW	AYB	EYB	ECON	FNCT		NORM	% COND
2200	03	12,342	84.9366	52.66	649,930	1968	1968	0	0	0	50.00	50.00

5 M/FAM LOW 0% - 2018 Heated Area: 12040 HX Base Yr

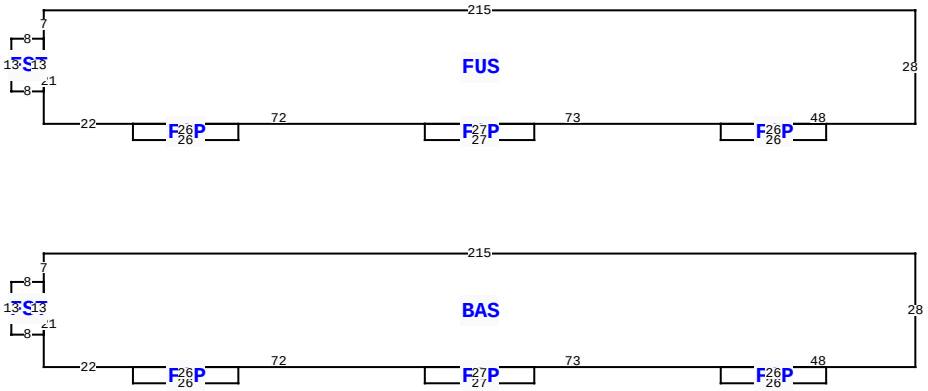

375 NW BASCOM NORRIS DR, LAKE CITY

BLD DATE		LGL DATE	
XF DATE		LAND DATE	
INC DATE		AG DATE	

VALUATION SUMMARY

VALUATION BY		STANDARD
Tax Group: 1	Tax Dist:	
BUILDING MARKET VALUE		1,998,798
TOTAL MARKET OB/XF VALUE		51,972
TOTAL LAND VALUE - MARKET		240,000
TOTAL MARKET VALUE		2,290,770
SOH/AGL Deduction		146,673
ASSESSED VALUE		2,144,097
TOTAL EXEMPTION VALUE	84	1,813,819
BASE TAXABLE VALUE		330,278
TOTAL JUST VALUE		2,290,770
NCON VALUE		0
INCOME VALUE		
PREVIOUS YEAR MKT VALUE		2,291,913

PERMIT NUM	DESCRIPTION	AMT	ISSUED

SALES DATA

OFF RECORD Number	DATE	TYPE INST	Q U	V I	RSN CD	SALE PRICE
1350/0647	12/19/2017	WD	Q	I	01	4,815,800
GRANTOR: CEDAR PARK LLC						
GRANTEE: SP PARK LLC						
1076/2776	2/23/2006	WD	Q	I		1,625,000
GRANTOR: HAVEN CEDAR PARK LLC						
GRANTEE: CEDAR PARK LLC						

BUILDING NOTES

BUILDING DIMENSIONS

BAS= W215 S7 FST= W8 S13 E8 N13$S21 E22 FOP= S4 E26 N4 W26$ E72FOP= S4 E27 N4 W27$ E73 FOP= S4 E26 N4 W26 $ E48 N28$ PTR=N60 FUS= W215 S7 FST= W8 S13 E8 N13$ S21 E22 FOP= S4 E26 N4 W26$ E72FOP= S4 E27 N4 W27$ E73 FOP= S4 E26 N4 W26$ E48 N28 $ S60$.

EXTRA FEATURES

L N	OB/XF CODE	DESCRIPTION	BLD	CAP	L	W	UNITS	UT	Adj R	ADJ UNIT PRICE	ORIG COND	YEAR ON	YEAR ACTUAL	Q	% COND	OB/XF MKT VALUE	NOTES

LAND DESCRIPTION

TOTAL OB/XF 0

L N	USE CODE	CLS	LAND USE DESCRIPTION	CAP	R D	LOC ZONE	FRONT	DEPTH	TOT LND UTS	UNIT TYPE	D T	DPTH FACT	% COND	TOT ADJ	UNIT PRICE	ADJ UNIT PRICE	LAND VALUE	OTHER ADJUSTMENTS AND NOTES	YEAR	DENSITY	DECL	FRZ	YR	CONSRV

REVIEW DATE 12/02/2024 BY SYS Total Acres: 8.00 Total Land Value: 240,000 Market: 0 Agricultural: 0 Common: 240,000 PRINTED 11/07/2025 BY SYS

COMM NE COR, S 605.90 FT FOR POB
FT, W 100 FT, S 50 FT, W 237 FT
RR, NW ALONG R/W 369.35 FT, N 37

SP PARK LLC
31899 DEL OBISOP SUITE 150, C/O STANDARD CEDAR PARK MANA
SAN JUAN CAPISTRANO, CA 92675

2026

30-3S-17-05832-000

COLUMBIA COUNTY PROPERTY

BUILDING CHARACTERISTICS

ELEMENT	CD	CONSTRUCTION
Exterior Wall	19	COMMON BRK 100
Roof Structur	03	GABLE/HIP 100
Roof Cover	03	COMP SHNGL 100
Interior Wall	05	DRYWALL 100
Interior Floo	07	CORK/VTILE 100
Air Condition	02	WINDOW 100
Heating Type	04	AIR DUCTED 100
Bedrooms		3 100
Bathrooms		1 100
Frame	02	WOOD FRAME 100
Story Height		8 100
RMS		0 100
Stories	2.	2. 100
Units		12 100
Condition Adj	02	02 100
Kitchen Adjus	01	01 100
Quality	03	03

DOR CODE	0300	MULTI-FAM 10+	
MAP NUM		MKT AREA	06
NEIGHBORHOOD/LOC	30317.00	1.00/	

AREA TYPE	TOTAL GROSS AREA	PCT OF BASE	YEAR	TOT ADJ AREA	SUBAREA MARKET VALUE
BAS	6,020	100		6,020	158,507
FOP	104	30		31	816
FOP	104	30		31	816
FOP	104	30		31	816
FOP	104	30		31	816
FOP	108	30		32	843
FOP	108	30		32	843
FST	104	55		57	1,501
FST	104	55		57	1,501
FUS	6,020	100		6,020	158,507
TOTALS	12,880			12,342	324,965

MARKET ADJUSTMENTS

TYPE	MDL	EFF. AREA	TOT ADJ PTS	EFF. BASE RATE	REPL. COST NEW	AYB	EYB	ECON	FNCT		NORM	% COND
2200	03	12,342	84.9366	52.66	649,930	1968	1968	0	0	0	50.00	50.00

6 M/FAM LOW 0% - 2018 Heated Area: 12040 HX Base Yr

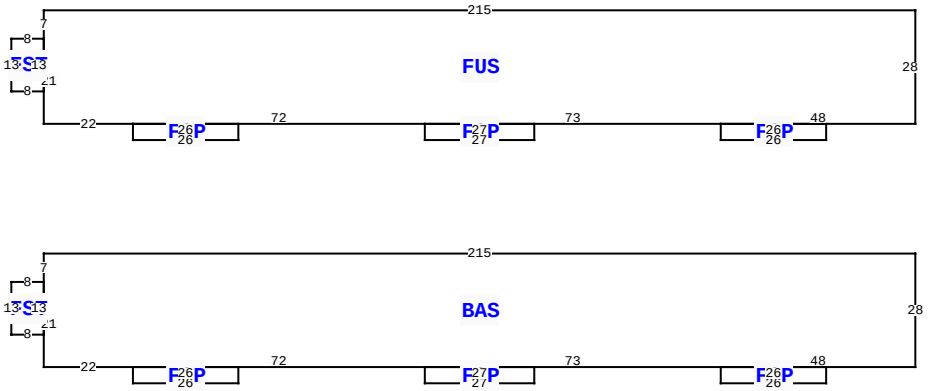

375 NW BASCOM NORRIS DR, LAKE CITY

BLD DATE		LGL DATE	
XF DATE		LAND DATE	
INC DATE		AG DATE	

VALUATION SUMMARY

VALUATION BY		STANDARD
Tax Group: 1	Tax Dist:	
BUILDING MARKET VALUE		1,998,798
TOTAL MARKET OB/XF VALUE		51,972
TOTAL LAND VALUE - MARKET		240,000
TOTAL MARKET VALUE		2,290,770
SOH/AGL Deduction		146,673
ASSESSED VALUE		2,144,097
TOTAL EXEMPTION VALUE	84	1,813,819
BASE TAXABLE VALUE		330,278
TOTAL JUST VALUE		2,290,770
NCON VALUE		0
INCOME VALUE		
PREVIOUS YEAR MKT VALUE		2,291,913

PERMIT NUM	DESCRIPTION	AMT	ISSUED

SALES DATA

OFF RECORD Number	DATE	TYPE INST	Q U	V I	RSN CD	SALE PRICE
1350/0647	12/19/2017	WD	Q	I	01	4,815,800
GRANTOR: CEDAR PARK LLC						
GRANTEE: SP PARK LLC						
1076/2776	2/23/2006	WD	Q	I		1,625,000
GRANTOR: HAVEN CEDAR PARK LLC						
GRANTEE: CEDAR PARK LLC						

BUILDING NOTES

BUILDING DIMENSIONS

BAS= W215 S7 FST= W8 S13 E8 N13$S21 E22 FOP= S4 E26 N4 W26$ E72FOP= S4 E27 N4 W27$ E73 FOP= S4 E26 N4 W26 $ E48 N28$ PTR=N60 FUS= W215S7 FST= W8 S13 E8 N13$ S21 E22 FOP= S4 E26 N4 W26$ E72 FOP= S4 E27 N4 W27$ E73 FOP= S4 E26 N4 W26 $ E48 N28$S60$.

EXTRA FEATURES

LN	OB/XF CODE	DESCRIPTION	BLD	CAP	L	W	UNITS	UT	Adj R	ADJ UNIT PRICE	ORIG COND	YEAR ON	YEAR ACTUAL	Q	% COND	OB/XF MKT VALUE	NOTES

LAND DESCRIPTION

TOTAL OB/XF 0

LN	USE CODE	CLS	LAND USE DESCRIPTION	CAP	RD	LOC ZONE	FRONT	DEPTH	TOT LND UTS	UNIT TYPE	DT	DPTH FACT	% COND	TOT ADJ	UNIT PRICE	ADJ UNIT PRICE	LAND VALUE	OTHER ADJUSTMENTS AND NOTES	YEAR	DENSITY	DECL	FRZ	YR	CONSRV

REVIEW DATE 12/02/2024 BY SYS Total Acres: 8.00 Total Land Value: 240,000 Market: 0 Agricultural: 0 Common: 240,000 PRINTED 11/07/2025 BY SYS

COMM NE COR, S 605.90 FT FOR POB
FT, W 100 FT, S 50 FT, W 237 FT
RR, NW ALONG R/W 369.35 FT, N 37

SP PARK LLC
31899 DEL OBISOP SUITE 150, C/O STANDARD CEDAR PARK MANA
SAN JUAN CAPISTRANO, CA 92675

2026

30-3S-17-05832-000

COLUMBIA COUNTY PROPERTY

BUILDING CHARACTERISTICS

ELEMENT	CD	CONSTRUCTION
Exterior Wall	19	COMMON BRK 100
Roof Structur	03	GABLE/HIP 100
Roof Cover	03	COMP SHNGL 100
Interior Wall	05	DRYWALL 100
Interior Floo	07	CORK/VTILE 100
Air Condition	02	WINDOW 100
Heating Type	04	AIR DUCTED 100
Bedrooms		3 100
Bathrooms		1 100
Frame	02	WOOD FRAME 100
Story Height		8 100
RMS		0 100
Stories	2.	2. 100
Units		12 100
Condition Adj	02	02 100
Kitchen Adjus	01	01 100
Quality	03	03

DOR CODE	0300	MULTI-FAM 10+	
MAP NUM		MKT AREA	06
NEIGHBORHOOD/LOC	30317.00	1.00/	

AREA TYPE	TOTAL GROSS AREA	PCT OF BASE	YEAR	TOT ADJ AREA	SUBAREA MARKET VALUE
BAS	6,020	100		6,020	158,507
FOP	104	30		31	816
FOP	104	30		31	816
FOP	104	30		31	816
FOP	104	30		31	816
FOP	108	30		32	843
FOP	108	30		32	843
FST	104	55		57	1,501
FST	104	55		57	1,501
FUS	6,020	100		6,020	158,507
TOTALS	12,880			12,342	324,965

MARKET ADJUSTMENTS

TYPE	MDL	EFF. AREA	TOT ADJ PTS	EFF. BASE RATE	REPL. COST NEW	AYB	EYB	ECON	FNCT		NORM	% COND
2200	03	12,342	84.9366	52.66	649,930	1968	1968	0	0	0	50.00	50.00

7 M/FAM LOW 0% - 2018 Heated Area: 12040 HX Base Yr

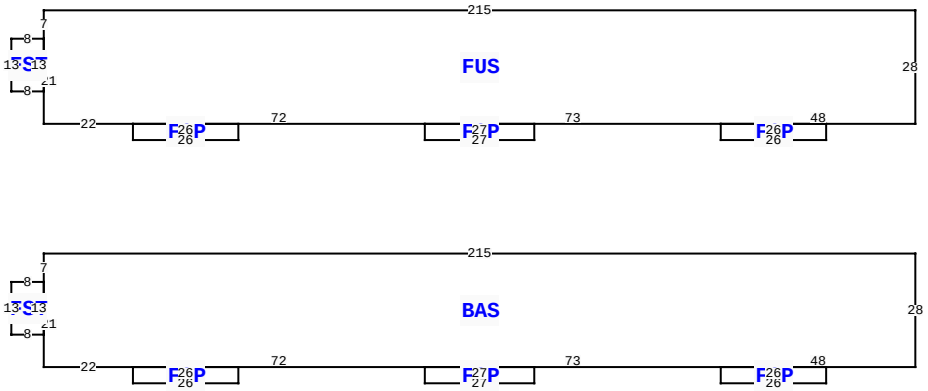

375 NW BASCOM NORRIS DR, LAKE CITY

BLD DATE		LGL DATE	
XF DATE		LAND DATE	
INC DATE		AG DATE	

VALUATION SUMMARY

VALUATION BY		STANDARD
Tax Group: 1	Tax Dist:	
BUILDING MARKET VALUE		1,998,798
TOTAL MARKET OB/XF VALUE		51,972
TOTAL LAND VALUE - MARKET		240,000
TOTAL MARKET VALUE		2,290,770
SOH/AGL Deduction		146,673
ASSESSED VALUE		2,144,097
TOTAL EXEMPTION VALUE	84	1,813,819
BASE TAXABLE VALUE		330,278
TOTAL JUST VALUE		2,290,770
NCON VALUE		0
INCOME VALUE		
PREVIOUS YEAR MKT VALUE		2,291,913

PERMIT NUM	DESCRIPTION	AMT	ISSUED

SALES DATA

OFF RECORD Number	DATE	TYPE INST	Q U	V I	RSN CD	SALE PRICE
1350/0647	12/19/2017	WD	Q	I	01	4,815,800
GRANTOR: CEDAR PARK LLC						
GRANTEE: SP PARK LLC						
1076/2776	2/23/2006	WD	Q	I		1,625,000
GRANTOR: HAVEN CEDAR PARK LLC						
GRANTEE: CEDAR PARK LLC						

BUILDING NOTES

BUILDING DIMENSIONS

BAS= W215 S7 FST= W8 S13 E8 N13$S21 E22 FOP= S4 E26 N4 W26$ E72FOP= S4 E27 N4 W27$ E73 FOP= S4 E26 N4 W26 $ E48 N28$ PTR=N60 FUS= W215 S7 FST= W8 S13 E8 N13$ S21 E22 FOP= S4 E26 N4 W26$ E72FOP= S4 E27 N4 W27$ E73 FOP= S4 E26 N4 W26$ E48 N28 $ S60$.

EXTRA FEATURES

L N	OB/XF CODE	DESCRIPTION	BLD	CAP	L	W	UNITS	UT	Adj R	ADJ UNIT PRICE	ORIG COND	YEAR ON	YEAR ACTUAL	Q	% COND	OB/XF MKT VALUE	NOTES

LAND DESCRIPTION

TOTAL OB/XF 0

L N	USE CODE	CLS	LAND USE DESCRIPTION	CAP	R D	LOC ZONE	FRONT	DEPTH	TOT LND UTS	UNIT TYPE	D T	DPTH FACT	% COND	TOT ADJ	UNIT PRICE	ADJ UNIT PRICE	LAND VALUE	OTHER ADJUSTMENTS AND NOTES	YEAR	DENSITY	DECL	FRZ	YR	CONSRV

REVIEW DATE 12/02/2024 BY SYS Total Acres: 8.00 Total Land Value: 240,000 Market: 0 Agricultural: 0 Common: 240,000 PRINTED 11/07/2025 BY SYS

COMM NE COR, S 605.90 FT FOR POB
FT, W 100 FT, S 50 FT, W 237 FT
RR, NW ALONG R/W 369.35 FT, N 37

SP PARK LLC
31899 DEL OBISOP SUITE 150, C/O STANDARD CEDAR PARK MANA
SAN JUAN CAPISTRANO, CA 92675

2026

30-3S-17-05832-000

COLUMBIA COUNTY PROPERTY

BUILDING CHARACTERISTICS

ELEMENT	CD	CONSTRUCTION
Exterior Wall	16	WD FR STUC 70
Exterior Wall	19	COMMON BRK 30
Roof Structur	03	GABLE/HIP 100
Roof Cover	03	COMP SHNGL 100
Interior Wall	05	DRYWALL 100
Interior Floo	15	HARDTILE 100
Ceiling	02	F.NOT SUS 100
Air Condition	06	ENG CENTRL 100
Heating Type	09	ENG F AIR 100
Fixtures		4 100
Frame	02	WOOD FRAME 100
Story Height		8 100
RMS		4 100
Stories	1.	1. 100
Units		0 100
Quality	05	05
DOR CODE	0300	MULTI-FAM 10+
MAP NUM		MKT AREA 06
NEIGHBORHOOD/LOC	30317.00	1.00/

AREA TYPE	TOTAL GROSS AREA	PCT OF BASE	YEAR	TOT ADJ AREA	SUBAREA MARKET VALUE
BAS	1,334	100		1,334	104,946
CAN	154	30		46	3,619
TOTALS	1,488			1,380	108,564

MARKET ADJUSTMENTS

TYPE	MDL	EFF. AREA	TOT ADJ PTS	EFF. BASE RATE	REPL. COST NEW	AYB	EYB	ECON	FNCT		NORM	% COND
4900	04	1,380	111.9090	82.81	114,278	2018	2018	0	0	0	5.00	95.00

8 OFFICE LOW 0% - 2018 Heated Area: 1334 HX Base Yr

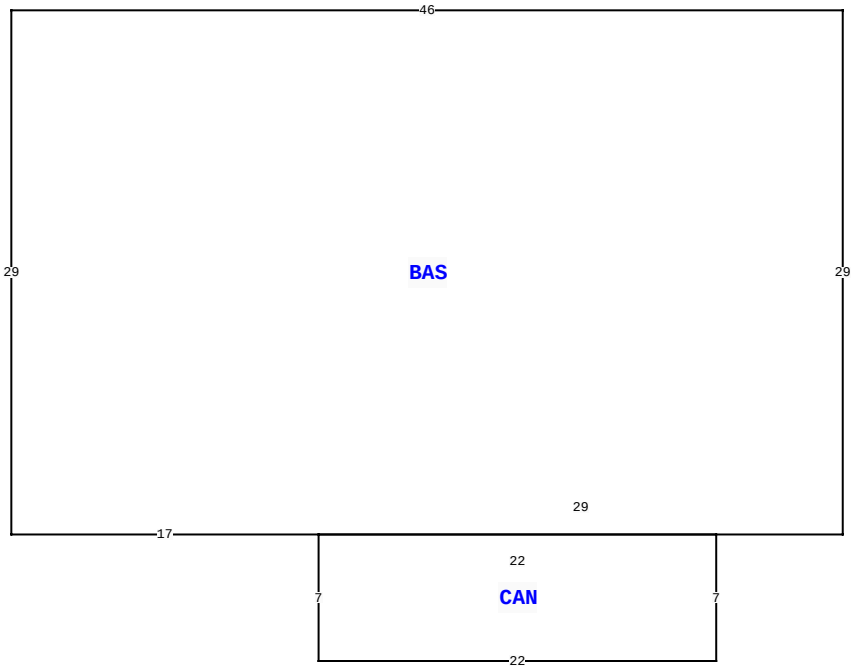

375 NW BASCOM NORRIS DR, LAKE CITY

BLD DATE		LGL DATE	
XF DATE		LAND DATE	
INC DATE		AG DATE	

VALUATION SUMMARY

VALUATION BY		STANDARD
Tax Group: 1	Tax Dist:	
BUILDING MARKET VALUE		1,998,798
TOTAL MARKET OB/XF VALUE		51,972
TOTAL LAND VALUE - MARKET		240,000
TOTAL MARKET VALUE		2,290,770
SOH/AGL Deduction		146,673
ASSESSED VALUE		2,144,097
TOTAL EXEMPTION VALUE	84	1,813,819
BASE TAXABLE VALUE		330,278
TOTAL JUST VALUE		2,290,770
NCON VALUE		0
INCOME VALUE		
PREVIOUS YEAR MKT VALUE		2,291,913

PERMIT NUM	DESCRIPTION	AMT	ISSUED

SALES DATA

OFF RECORD Number	DATE	TYPE INST	Q U /	V I /	RSN CD	SALE PRICE
1350/0647	12/19/2017	WD	Q	I	01	4,815,800
GRANTOR: CEDAR PARK LLC						
GRANTEE: SP PARK LLC						
1076/2776	2/23/2006	WD	Q	I		1,625,000
GRANTOR: HAVEN CEDAR PARK LLC						
GRANTEE: CEDAR PARK LLC						

BUILDING NOTES

BUILDING DIMENSIONS

BAS= W46 S29 E17 CAN= S7 E22 N7 W22$ E29 N29$.

EXTRA FEATURES

L N	OB/XF CODE	DESCRIPTION	BLD	CAP	L	W	UNITS	UT	Adj R	ADJ UNIT PRICE	ORIG COND	YEAR ON	YEAR ACTUAL	Q	% COND	OB/XF MKT VALUE	NOTES

LAND DESCRIPTION

TOTAL OB/XF 0

L N	USE CODE	CLS	LAND USE DESCRIPTION	CAP	R D	LOC ZONE	FRONT	DEPTH	TOT LND UTS	UNIT TYPE	D T	DPTH FACT	% COND	TOT ADJ	UNIT PRICE	ADJ UNIT PRICE	LAND VALUE	OTHER ADJUSTMENTS AND NOTES	YEAR	DENSITY	DECL	FRZ	YR	CONSRV

REVIEW DATE 12/02/2024 BY SYS Total Acres: 8.00 Total Land Value: 240,000 Market: 0 Agricultural: 0 Common: 240,000 PRINTED 11/07/2025 BY SYS