LOT 11 HILLS OF WINDSOR S/D.
QC 1034-2099, WD 1034-2105, WD 1

NEAL BRADLEY/NEAL SARAH
537 SW WINDSOR DR
LAKE CITY, FL 32024

2026

30-3S-16-02411-111

COLUMBIA COUNTY PROPERTY

BUILDING CHARACTERISTICS

ELEMENT	CD	CONSTRUCTION
Exterior Wall	19	COMMON BRK 100
Roof Structur	08	IRREGULAR 100
Roof Cover	03	COMP SHNGL 100
Interior Wall	05	DRYWALL 100
Interior Floo	12	HARDWOOD 80
Interior Floo	15	HARDTILE 20
Air Condition	03	CENTRAL 100
Heating Type	04	AIR DUCTED 100
Bedrooms		4 100
Bathrooms		4.5 100
Frame	02	WOOD FRAME 100
Stories	2.	2. 100
Architectual	05	CONV 100
Units		0 100
Quality	07	07
DOR CODE	0100	SINGLE FAMILY
MAP NUM		MKT AREA 01
NEIGHBORHOOD/LOC	30316.020	1.00/

AREA TYPE	TOTAL GROSS AREA	PCT OF BASE	YEAR	TOT ADJ AREA	SUBAREA MARKET VALUE
BAS	3,083	100		3,083	333,245
FGR	676	55		372	40,210
FOP	28	30		8	865
FOP	28	30		8	865
FOP	60	30		18	1,945
FOP	138	30		41	4,432
FUS	2,949	100		2,949	318,760
UDG	2,196	55		1,208	130,574
TOTALS	9,158			7,687	830,896

MARKET ADJUSTMENTS

TYPE	MDL	EFF. AREA	TOT ADJ PTS	EFF. BASE RATE	REPL. COST NEW	AYB	EYB	ECON	FNCT		NORM	% COND
0100	01	7,687	132.2013	148.07	1,138,214	2008	2008	10	0	0	17.00	73.00

1 SINGLE FAM 100% - 2022 Heated Area: 6032 HX Base Yr 2022

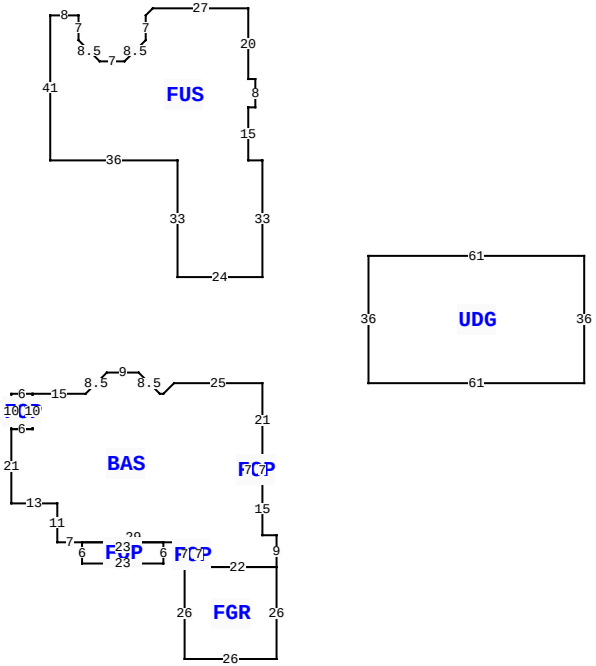

537 SW WINDSOR DR, LAKE CITY

BLD DATE		LGL DATE	
XF DATE		LAND DATE	04/07/2025 MLU
INC DATE		AG DATE	

VALUATION SUMMARY

VALUATION BY		STANDARD
Tax Group: 3	Tax Dist:	
BUILDING MARKET VALUE		830,896
TOTAL MARKET OB/XF VALUE		55,576
TOTAL LAND VALUE - MARKET		50,000
TOTAL MARKET VALUE		936,472
SOH/AGL Deduction		65,684
ASSESSED VALUE		870,788
TOTAL EXEMPTION VALUE	HX HB	50,722
BASE TAXABLE VALUE		820,066
TOTAL JUST VALUE		936,472
NCON VALUE		0
INCOME VALUE		
PREVIOUS YEAR MKT VALUE		948,997

PERMIT NUM	DESCRIPTION	AMT	ISSUED
000051756	Roof Replacement	30,000	12/09/2024
000051757	Roof Replacement	9,500	12/09/2024
000046787	Remodel	56,270	03/20/2023
000044559	Electrical Servic	0	05/31/2022
32732	GARAGE	621	02/25/2015
29336	POOL	200	04/20/2011

SALES DATA

OFF RECORD Number	DATE	TYPE INST	Q U	V I	RSN CD	SALE PRICE
1438/135	5/12/2021	WD	Q	I	01	749,000
GRANTOR: MORGAN DAVID H AS TRU						
GRANTEE: NEAL BRADLEY						
1312/0815	3/23/2016	WD	Q	I	01	779,000
GRANTOR: KEVIN M & LESLEY E KE						
GRANTEE: DAVID H MORGAN TRUS						

BUILDING NOTES

BUILDING DIMENSIONS

BAS= W25 D3 L3 W1 L6 U6 W9 D6 L6 W15 FOP= W6 S10 E6 N10$ S10 W6 S21 E13 S11 E7 FOP= S6 E23 N6 W23$ E29 FOP= S7 E4 N7 W4$ E4 S7 FGR= W4 S26 E26 N26 W22$ E22 N9 W4 N15 FOP= N7 W4 S7 E4$ W4 N7 E4 N21$ PTR= N30 FUS= N33 W4 N15 E2 N8 W2 N20 W27 D2 L2 S7 D6 L6 W7 L6 U6 N7 W8 S41 E36 S33 E24$ S30$ PTR= E30 UDG= E61 N36 W61 S36$ W30$.

EXTRA FEATURES

LN	OB/XF CODE	DESCRIPTION	BLD	CAP	L	W	UNITS	UT	Adj R	ADJ UNIT PRICE	ORIG COND	YEAR ON	YEAR ACTUAL	Q	% COND	OB/XF MKT VALUE	NOTES
1	0166	CONC,PAVMT	0	100	0	0	6,114.00	UT	3.00	3.00	100	2008	2008	3	100	18,342	
2	0280	POOL R/CON	0	100	16	40	640.00	UT	59.50	59.50	100	2011	2011	3	68	25,894	
3	0169	FENCE/WOOD	0	100	0	0	288.00	UT	15.50	15.50	100	2011	2011	3	100	4,464	
4	0166	CONC,PAVMT	0	100	0	0	2,538.00	UT	2.00	2.00	100	2015	2015	3	100	5,076	
5	0119	MASONRY WA	0	100	0	0	1.00	UT	0.00	0.00	100	2017	2017	3	100	300	
6	0262	PRCH,FOP	0	100	0	0	1.00	UT	0.00	0.00	100	2017	2017	3	100	1,500	

LAND DESCRIPTION

TOTAL OB/XF 55,576

LN	USE CODE	CLS	LAND USE DESCRIPTION	CAP	RD	LOC ZONE	FRONT	DEPTH	TOT LND UTS	UNIT TYPE	DT	DPTH FACT	% COND	TOT ADJ	UNIT PRICE	ADJ UNIT PRICE	LAND VALUE	OTHER ADJUSTMENTS AND NOTES	YEAR	DENSITY	DECL	FRZ	YR	CONSRV
1	0100	C	SFR	100			0.00	0.00	1.00	LT		1.00	1.00	1.00	50,000.00	50,000.00	50,000							

REVIEW DATE 04/04/2023 BY TW Total Acres: 3.01 Total Land Value: 50,000 Market: 0 Agricultural: 0 Common: 50,000 PRINTED 11/17/2025 BY SYS