BEG NE COR SE1/4 OF SE1/4, RUN W
TO N RW OF US-27, SE ALONG R/W 1
NE 10 FT, SE ALONG R/W 649.65 FT

SMITH & SONS SOD COMPANY INC
4661 W STATE ROAD 238
LAKE BUTLER, FL 32054

2026

29-6S-16-03983-000

COLUMBIA COUNTY PROPERTY

BUILDING CHARACTERISTICS

ELEMENT	CD	CONSTRUCTION
Exterior Wall	17	MSNRY STUC 100
Roof Structur	04	WOOD TRUSS 100
Roof Cover	12	MODULAR MT 100
Interior Wall	02	WALL BD/WD 50
Interior Wall	05	DRYWALL 50
Interior Floo	02	MIN PLYWD 50
Interior Floo	10	TERRAZZO 50
Ceiling	02	F.NOT SUS 100
Air Condition	03	CENTRAL 100
Heating Type	04	AIR DUCTED 100
Fixtures		13 100
Frame	03	MASONRY 100
Story Height		12 100
RMS		4 100
Stories	1.	1. 100
Units		0 100
Condition Adj	02	02 100
Quality	03	03
DOR CODE	3300	NIGHTCLUB/BARS
MAP NUM		MKT AREA 02
NEIGHBORHOOD/LOC	29616.00	1.00/

AREA TYPE	TOTAL GROSS AREA	PCT OF BASE	YEAR	TOT ADJ AREA	SUBAREA MARKET VALUE
BAS	368	100		368	3,369
BAS	3,362	100		3,362	30,776
CAN	60	30		18	165
CAN	84	30		25	229
KTA	624	110		686	6,280
UOP	228	20		46	421
USP	81	35		28	256
UST	84	40		34	311
UST	168	40		67	613
UST	532	40		213	1,950
TOTALS	5,591			4,847	44,369

MARKET ADJUSTMENTS

TYPE	MDL	EFF. AREA	TOT ADJ PTS	EFF. BASE RATE	REPL. COST NEW	AYB	EYB	ECON	FNCT	AP	NORM	% COND
3300	04	4,847	66.3273	45.77	221,847	1950	1950	0	0	30	50.00	20.00

1 NCLUB/BARS 0% - 2025 Heated Area: 4354 HX Base Yr

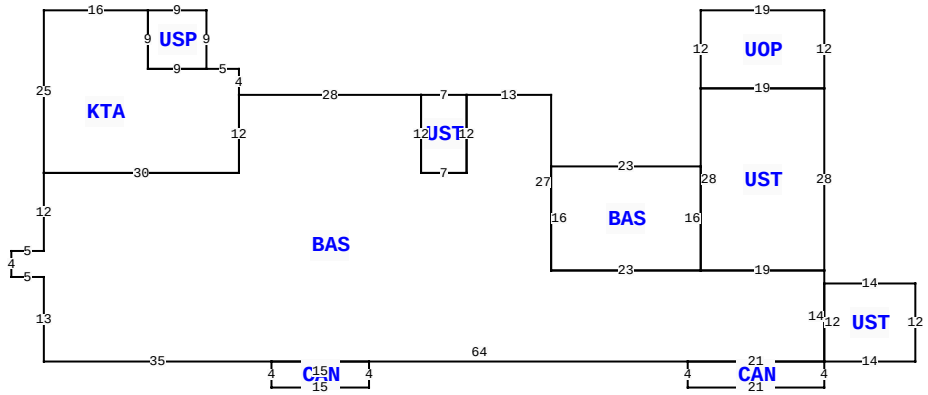

3790 SW CENTERVILLE AVE, FORT WHITE

BLD DATE		LGL DATE	
XF DATE		LAND DATE	04/07/2025 MLU
INC DATE		AG DATE	

VALUATION SUMMARY

VALUATION BY	STANDARD
Tax Group: 4	Tax Dist:
BUILDING MARKET VALUE	97,989
TOTAL MARKET OB/XF VALUE	6,000
TOTAL LAND VALUE - MARKET	92,690
TOTAL MARKET VALUE	196,679
SOH/AGL Deduction	0
ASSESSED VALUE	196,679
TOTAL EXEMPTION VALUE	0
BASE TAXABLE VALUE	196,679
TOTAL JUST VALUE	196,679
NCON VALUE	0
INCOME VALUE	
PREVIOUS YEAR MKT VALUE	196,679

SALE:4:1: SALE INC PERSONAL PROPERTY
SALE:3:1: INCLUDED #29-6S-16-03969-008
SALE:2:1: SALE INCLUDED PER.PROPERTY,LIQ. LICENSE.
LAND:2:1: COMBINED USE-REST & SFR

PERMIT NUM	DESCRIPTION	AMT	ISSUED
000053296	Roof Replacement	5,200	06/03/2025
000051004	Electrical Servic	0	10/09/2024
000050075	Electrical Servic	0	06/07/2024
000049662	Roof Replacement	30,000	04/22/2024
16616	REMODEL	100	02/18/2000
16296	M H	100	11/17/1999

SALES DATA

OFF RECORD Number	DATE	TYPE INST	Q U	V I	RSN CD	SALE PRICE
1512/1787	4/16/2024	WD	U	I	35	379,000
GRANTOR: DUKES DEBORAH						
GRANTEE: SMITH & SONS SOD CO						
1236/2692	6/01/2012	WD	U	I	12	85,000
GRANTOR: COLUMBIA BANK						
GRANTEE: DEBORAH DUKES						

BUILDING NOTES

BUILDING DIMENSIONS

BAS= W13 UST= W7 S12 E7 N12$S12 W7 N12 W28 KTA= N4 W5 USP= N9 W9 S9 E9$ W9 N9 W16 S25 E30 N12$ S12 W30 S12 W5 S4E5 S13 E35 CAN= S4 E15 N4 W15$ E64 CAN= S4 E21 N4 W21$ E21 UST= E14 N12 W14 S12$ N14 UST= N28 UOP= N12 W19 S12 E19$ W19 S28 E19$ W19 BAS= N16 W23 S16 E23$ W23 N27$.

EXTRA FEATURES

LN	OB/XF CODE	DESCRIPTION	BLD	CAP	L	W	UNITS	UT	Adj R	ADJ UNIT PRICE	ORIG COND	YEAR ON	YEAR ACTUAL	Q	% COND	OB/XF MKT VALUE	NOTES
1	0260	PAVEMENT-A	0	0	0	0	1.00	UT	3,000.00	3,000.00	50	0	0	3	50	1,500	
2	0040	BARN,POLE	0	0	0	0	1.00	UT	0.00	0.00	100	2015	2015	3	100	1,000	
3	0169	FENCE/WOOD	0	0	0	0	1.00	UT	0.00	0.00	100	2015	2015	3	100	500	
4	9947	Septic	0	0	0	0	1.00	UT	3,000.00	3,000.00	100			3	100	3,000	

LAND DESCRIPTION

TOTAL OB/XF 6,000

LN	USE CODE	CLS	LAND USE DESCRIPTION	CAP	RD	LOC ZONE	FRONT	DEPTH	TOT LND UTS	UNIT TYPE	DT	DPTH FACT	% COND	TOT ADJ	UNIT PRICE	ADJ UNIT PRICE	LAND VALUE	OTHER ADJUSTMENTS AND NOTES	YEAR	DENSITY	DECL	FRZ	YR	CONSRV
1	3300	C	NIGHT CLUB	0		CG	0.00	0.00	1.00	AC		1.00	1.00	1.50	17,000.00	25,500.00	25,500							
2	0100	C	SFR	0		CG	0.00	0.00	7.17	AC		1.00	1.00	1.00	7,000.00	7,000.00	50,190							
3	4800	C	WAREHOUSE	0		00	0.00	0.00	1.00	AC		1.00	1.00	1.00	17,000.00	17,000.00	17,000							

REVIEW DATE 12/04/2024 BY mark Total Acres: 9.17 Total Land Value: 92,690 Market: 0 Agricultural: 0 Common: 92,690 PRINTED 10/10/2025 BY SYS

BEG NE COR SE1/4 OF SE1/4, RUN W
TO N RW OF US-27, SE ALONG R/W 1
NE 10 FT, SE ALONG R/W 649.65 FT

SMITH & SONS SOD COMPANY INC
4661 W STATE ROAD 238
LAKE BUTLER, FL 32054

2026

29-6S-16-03983-000

COLUMBIA COUNTY PROPERTY

BUILDING CHARACTERISTICS

ELEMENT	CD	CONSTRUCTION
Exterior Wall	15	CONC BLOCK 100
Roof Structur	03	GABLE/HIP 100
Roof Cover	03	COMP SHNGL 100
Interior Wall	02	WALL BD/WD 100
Interior Floo	06	VINYL ASB 100
Air Condition	03	CENTRAL 100
Heating Type	04	AIR DUCTED 100
Fixtures		3 100
Frame	03	MASONRY 100
Story Height		8 100
RMS		4 100
Stories	1.	1. 100
Units		2 100
Condition Adj	02	02 100
Quality	05	05

DOR CODE	3300	NIGHTCLUB/BARS	
MAP NUM		MKT AREA	02
NEIGHBORHOOD/LOC	29616.00	1.00/	

AREA TYPE	TOTAL GROSS AREA	PCT OF BASE	YEAR	TOT ADJ AREA	SUBAREA MARKET VALUE
BAS	1,891	100		1,891	50,121
CAN	120	30		36	954
FST	192	50		96	2,545
TOTALS	2,203			2,023	53,620

MARKET ADJUSTMENTS

TYPE	MDL	EFF. AREA	TOT ADJ PTS	EFF. BASE RATE	REPL. COST NEW	AYB	EYB	ECON	FNCT		NORM	% COND
2700	04	2,023	62.3700	53.01	107,239	1976	1976	0	0	0	50.00	50.00

2 DUPLEX 0% - 2025 Heated Area: 1891 HX Base Yr

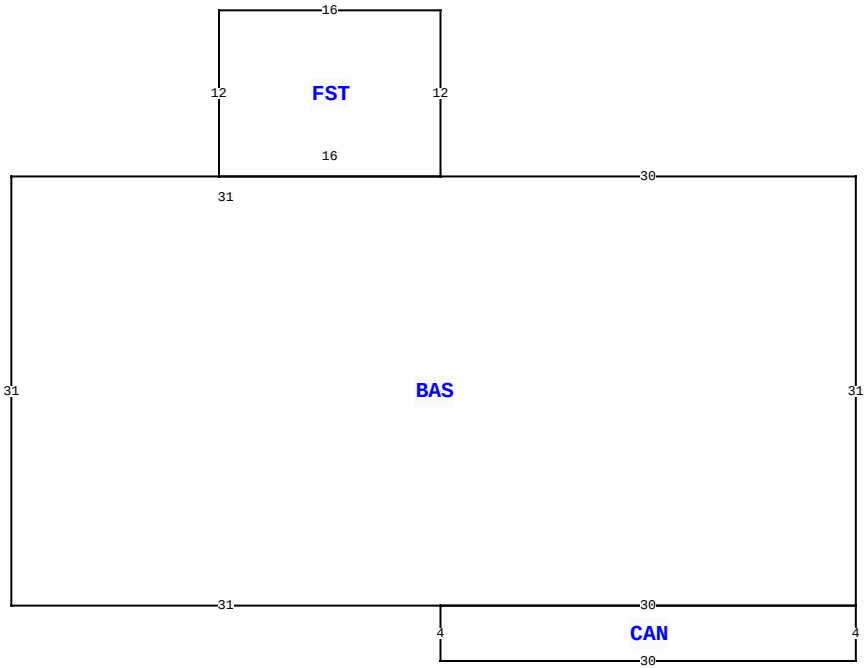

3790 SW CENTERVILLE AVE, FORT WHITE

BLD DATE		LGL DATE	
XF DATE		LAND DATE	04/07/2025 MLU
INC DATE		AG DATE	

VALUATION SUMMARY

VALUATION BY	STANDARD
Tax Group: 4	Tax Dist:
BUILDING MARKET VALUE	97,989
TOTAL MARKET OB/XF VALUE	6,000
TOTAL LAND VALUE - MARKET	92,690
TOTAL MARKET VALUE	196,679
SOH/AGL Deduction	0
ASSESSED VALUE	196,679
TOTAL EXEMPTION VALUE	0
BASE TAXABLE VALUE	196,679
TOTAL JUST VALUE	196,679
NCON VALUE	0
INCOME VALUE	
PREVIOUS YEAR MKT VALUE	196,679

PERMIT NUM	DESCRIPTION	AMT	ISSUED

SALES DATA

OFF RECORD Number	DATE	TYPE INST	Q U /	V I /	RSN CD	SALE PRICE
1512/1787	4/16/2024	WD	U	I	35	379,000
GRANTOR: DUKES DEBORAH						
GRANTEE: SMITH & SONS SOD CO						
1236/2692	6/01/2012	WD	U	I	12	85,000
GRANTOR: COLUMBIA BANK						
GRANTEE: DEBORAH DUKES						

BUILDING NOTES

BUILDING DIMENSIONS

BAS= W30 FST= N12 W16 S12 E16$ W31 S31 E31 CAN= S4 E30 N4 W30$ E30 N31$.

EXTRA FEATURES

L N	OB/XF CODE	DESCRIPTION	BLD	CAP	L	W	UNITS	UT	Adj R	ADJ UNIT PRICE	ORIG COND	YEAR ON	YEAR ACTUAL	Q	% COND	OB/XF MKT VALUE	NOTES

LAND DESCRIPTION

TOTAL OB/XF 0

L N	USE CODE	CLS	LAND USE DESCRIPTION	CAP	R D	LOC ZONE	FRONT	DEPTH	TOT LND UTS	UNIT TYPE	D T	DPTH FACT	% COND	TOT ADJ	UNIT PRICE	ADJ UNIT PRICE	LAND VALUE	OTHER ADJUSTMENTS AND NOTES	YEAR	DENSITY	DECL	FRZ	YR	CONSRV

REVIEW DATE 12/04/2024 BY mark Total Acres: 9.17 Total Land Value: 92,690 Market: 0 Agricultural: 0 Common: 92,690 PRINTED 10/10/2025 BY SYS