COMM NE COR OF SEC, RUN SOUTH 29 FT FOR POB, RUN S 224.5 FT, W 51 FT, E 517.97 FT TO POB.

STLWFAR FOUNDATION CORPORATION
709 SW SHERLOCK TER
LAKE CITY, FL 32024

**2026**

**29-6S-16-03969-036**

## COLUMBIA COUNTY PROPERTY



### BUILDING CHARACTERISTICS

| ELEMENT | CD | CONSTRUCTION |
|---|---|---|
| Exterior Wall | 19 | COMMON BRK 100 |
| Roof Structur | 03 | GABLE/HIP 100 |
| Roof Cover | 03 | COMP SHNGL 100 |
| Interior Wall | 05 | DRYWALL 100 |
| Interior Floo | 04 | C ABOVE GD 90 |
| Interior Floo | 08 | SHT VINYL 10 |
| Air Condition | 03 | CENTRAL 100 |
| Heating Type | 04 | AIR DUCTED 100 |
| Bedrooms | | 3 100 |
| Bathrooms | | 2 100 |
| Frame | 01 | NONE 100 |
| Stories | 1. | 1. 100 |
| Architectual | 05 | CONV 100 |
| Units | | 0 100 |
| Condition Adj | 02 | 02 100 |
| Kitchen Adjus | 01 | 01 100 |
| Quality | 05 | 05 |
| DOR CODE | 0100 | SINGLE FAMILY |
| MAP NUM | | MKT AREA 02 |
| NEIGHBORHOOD/LOC | 29616.00 | 1.00/ |

| AREA TYPE | TOTAL GROSS AREA | PCT OF BASE | YEAR | TOT ADJ AREA | SUBAREA MARKET VALUE |
|---|---|---|---|---|---|
| BAS | 2,220 | 100 | | 2,220 | 169,769 |
| FEP | 168 | 80 | | 134 | 10,247 |
| FGR | 576 | 55 | | 317 | 24,242 |
| FOP | 100 | 30 | | 30 | 2,295 |
| FOP | 156 | 30 | | 47 | 3,595 |
| TOTALS | 3,220 | | | 2,748 | 210,146 |

### MARKET ADJUSTMENTS

| TYPE | MDL | EFF. AREA | TOT ADJ PTS | EFF. BASE RATE | REPL. COST NEW | AYB | EYB | ECON | FNCT | | NORM | % COND |
|---|---|---|---|---|---|---|---|---|---|---|---|---|
| 0100 | 01 | 2,748 | 105.0462 | 117.65 | 323,302 | 1974 | 1974 | 0 | 0 | 0 | 35.00 | 65.00 |

1 SINGLE FAM 0% - 2025 Heated Area: 2220 HX Base Yr

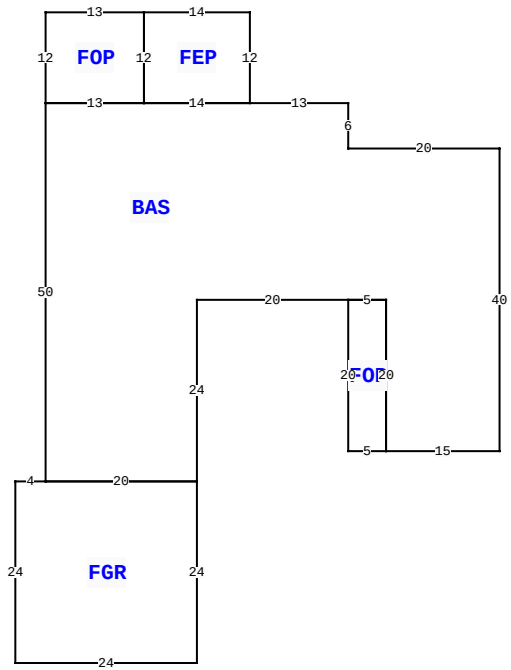


3186 SW CENTERVILLE AVE, FORT WHITE

| | | | |
|---|---|---|---|
| BLD DATE | | LGL DATE | |
| XF DATE | | LAND DATE | 04/07/2025 MLU |
| INC DATE | | AG DATE | |

### VALUATION SUMMARY

| | |
|---|---|
| VALUATION BY | STANDARD |
| Tax Group: 3 | Tax Dist: |
| BUILDING MARKET VALUE | 210,146 |
| TOTAL MARKET OB/XF VALUE | 2,500 |
| TOTAL LAND VALUE - MARKET | 37,380 |
| TOTAL MARKET VALUE | 250,026 |
| SOH/AGL Deduction | 0 |
| ASSESSED VALUE | 250,026 |
| TOTAL EXEMPTION VALUE | 0 |
| BASE TAXABLE VALUE | 250,026 |
| TOTAL JUST VALUE | 250,026 |
| NCON VALUE | 0 |
| INCOME VALUE | |
| PREVIOUS YEAR MKT VALUE | 250,026 |

| PERMIT NUM | DESCRIPTION | AMT | ISSUED |
|---|---|---|---|
| | | | |

### SALES DATA

| OFF RECORD Number | DATE | TYPE INST | Q U | V I | RSN CD | SALE PRICE |
|---|---|---|---|---|---|---|
| 1510/1585 | 3/18/2024 | WD | U | I | 11 | 100 |
| GRANTOR: STLWFAR LLC | | | | | | |
| GRANTEE: STLWFAR FOUNDATION | | | | | | |
| 1403/2645 | 1/22/2020 | WD | U | I | 11 | 100 |
| GRANTOR: PAUL MAX & JOSEPHINA | | | | | | |
| GRANTEE: STLWFAR LLC | | | | | | |

### BUILDING NOTES

### BUILDING DIMENSIONS

BAS= W13 FEP= N12 W14 S12 E14$ W14 FOP= N12 W13 S12 E13$ W13 S50 FGR= W4 S24E24N24 W20$ E20 N24 E20 FOP= S20 E5 N20 W5$ E5 S20 E15 N40 W20 N6$.

### EXTRA FEATURES

| LN | OB/XF CODE | DESCRIPTION | BLD | CAP | L | W | UNITS | UT | Adj R | ADJ UNIT PRICE | ORIG COND | YEAR ON | YEAR ACTUAL | Q | % COND | OB/XF MKT VALUE | NOTES |
|---|---|---|---|---|---|---|---|---|---|---|---|---|---|---|---|---|---|
| 1 | 0166 | CONC,PAVMT | 0 | 0 | 0 | 0 | 1.00 | UT | 0.00 | 0.00 | 100 | 0 | 0 | 3 | 100 | 500 | |
| 2 | 0190 | FPLC PF | 0 | 0 | 0 | 0 | 1.00 | UT | 1,200.00 | 1,200.00 | 100 | 0 | 0 | 3 | 100 | 1,200 | |
| 3 | 0021 | BARN,FR AE | 0 | 0 | 0 | 0 | 1.00 | UT | 0.00 | 0.00 | 100 | 0 | 0 | 3 | 100 | 800 | |

### LAND DESCRIPTION

TOTAL OB/XF 2,500

| LN | USE CODE | CLS | LAND USE DESCRIPTION | CAP | RD | LOC ZONE | FRONT | DEPTH | TOT LND UTS | UNIT TYPE | DT | DPTH FACT | % COND | TOT ADJ | UNIT PRICE | ADJ UNIT PRICE | LAND VALUE | OTHER ADJUSTMENTS AND NOTES | YEAR | DENSITY | DECL | FRZ | YR | CONSRV |
|---|---|---|---|---|---|---|---|---|---|---|---|---|---|---|---|---|---|---|---|---|---|---|---|---|
| 1 | 0100 | C | SFR | 0 | | A-1 | 0.00 | 0.00 | 2.67 | AC | | 1.00 | 1.00 | 1.00 | 14,000.00 | 14,000.00 | 37,380 | | | | | | | |

REVIEW DATE 06/11/2015 BY TW Total Acres: 2.67 Total Land Value: 37,380 Market: 0 Agricultural: 0 Common: 37,380 PRINTED 10/24/2025 BY SYS