COMM SW COR LOT 5 TATE ACRES
S/D, RUN E 148.55 FT FOR POB,
CONT E 791.56 FT, N 285.98 FT,

JONES RONALD S JR/JONES LASHAWN N
,

2026

29-4S-17-08841-105

COLUMBIA COUNTY PROPERTY

BUILDING CHARACTERISTICS

ELEMENT	CD	CONSTRUCTION
Exterior Wall	17	MSNRY STUC 100
Roof Structur	08	IRREGULAR 100
Roof Cover	12	MODULAR MT 100
Interior Wall	05	DRYWALL 100
Interior Floo	14	CARPET 80
Interior Floo	15	HARDTILE 20
Air Condition	03	CENTRAL 100
Heating Type	04	AIR DUCTED 100
Bedrooms		3 100
Bathrooms		2 100
Frame	03	MASONRY 100
Stories	1.	1. 100
Architectual	05	CONV 100
Units		0 100
Condition Adj	03	03 100
Kitchen Adjus	01	01 100
Quality	05	05
DOR CODE	0100	SINGLE FAMILY
MAP NUM		MKT AREA 02
NEIGHBORHOOD/LOC	29417.010	1.00/

AREA TYPE	TOTAL GROSS AREA	PCT OF BASE	YEAR	TOT ADJ AREA	SUBAREA MARKET VALUE
BAS	2,069	100		2,069	204,777
FDG	690	60		414	40,975
FEP	440	80		352	34,839
FGR	506	55		278	27,515
FOP	184	30		55	5,444
FOP	240	30		72	7,126
TOTALS	4,129			3,240	320,677

MARKET ADJUSTMENTS

TYPE	MDL	EFF. AREA	TOT ADJ PTS	EFF. BASE RATE	REPL. COST NEW	AYB	EYB	ECON	FNCT		NORM	% COND
0100	01	3,240	113.2960	126.89	411,124	2003	2003	0	0	0	22.00	78.00

1 SINGLE FAM 0% - 0 Heated Area: 2069 HX Base Yr

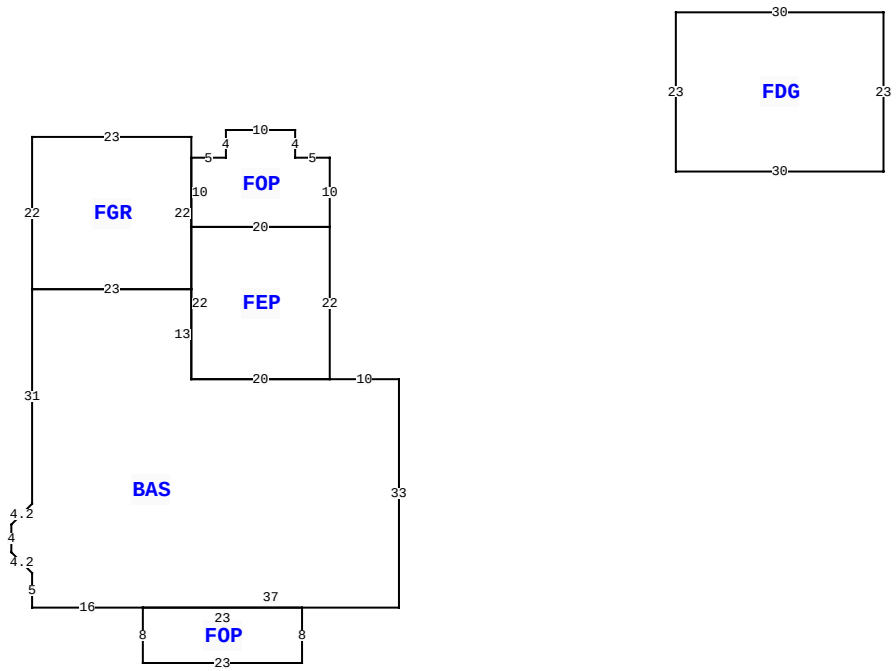

815 SW JONES TER, LAKE CITY

BLD DATE		LGL DATE	
XF DATE		LAND DATE	05/16/2024 MLU
INC DATE		AG DATE	

VALUATION SUMMARY

VALUATION BY	STANDARD
Tax Group: 2	Tax Dist:
BUILDING MARKET VALUE	320,677
TOTAL MARKET OB/XF VALUE	2,292
TOTAL LAND VALUE - MARKET	45,000
TOTAL MARKET VALUE	367,969
SOH/AGL Deduction	0
ASSESSED VALUE	367,969
TOTAL EXEMPTION VALUE	0
BASE TAXABLE VALUE	367,969
TOTAL JUST VALUE	367,969
NCON VALUE	0
INCOME VALUE	
PREVIOUS YEAR MKT VALUE	372,080

LAND:1:1: 8.02 ACRES

XFOB:1:1: SYLVANIA

PERMIT NUM	DESCRIPTION	AMT	ISSUED
000049958	Roof Replacement	24,000	05/24/2024
20093	SFR	345	10/30/2002

SALES DATA

OFF RECORD Number	DATE	TYPE INST	Q U	V I	RSN CD	SALE PRICE
0950/0910	4/04/2002	WD	Q	V		19,000
GRANTOR: JOANN M DIX						
GRANTEE: RONALD S & LASHAWN						
0950/0907	4/03/2002	WD	Q	V	01	100
GRANTOR: MERVIN JONES TRUSTEE						
GRANTEE: JOANN M DIX						

BUILDING NOTES

BUILDING DIMENSIONS

BAS= W10 FEP= N22 FOP= N10 W5 N4 W10 S4 W5 S10 E20$ W20 S22 E20$ W20 N13 FGR= N22 W23 S22 E23$ W23 S31 D3 L3 S4 R3 D3 S5 E16 FOP= S8 E23 N8 W23$ E37 N33 $ PTR= N30 E40 FDG= E30 N23 W30 S23$ S30 W40$.

EXTRA FEATURES

LN	OB/XF CODE	DESCRIPTION	BLD	CAP	L	W	UNITS	UT	Adj R	ADJ UNIT PRICE	ORIG COND	YEAR ON	YEAR ACTUAL	Q	% COND	OB/XF MKT VALUE	NOTES
1	0166	CONC,PAVMT	0	0	0	0	561.00	UT	2.00	2.00	100	2003	2003	3	100	1,122	
2	0166	CONC,PAVMT	0	0	0	0	520.00	UT	2.25	2.25	100	2010	2010	3	100	1,170	

LAND DESCRIPTION

TOTAL OB/XF 2,292

LN	USE CODE	CLS	LAND USE DESCRIPTION	CAP	RD	LOC ZONE	FRONT	DEPTH	TOT LND UTS	UNIT TYPE	DT	DPTH FACT	% COND	TOT ADJ	UNIT PRICE	ADJ UNIT PRICE	LAND VALUE	OTHER ADJUSTMENTS AND NOTES	YEAR	DENSITY	DECL	FRZ	YR	CONSRV
1	0100	C	SFR	0		A-1	0.00	0.00	5.00	AC		1.00	1.00	0.90	10,000.00	9,000.00	45,000							

REVIEW DATE 06/03/2024 BY jerry Total Acres: 5.00 Total Land Value: 45,000 Market: 0 Agricultural: 0 Common: 45,000 PRINTED 10/06/2025 BY SYS