LOTS 22 & 23 FAIRFIELD WOODS S/D
454-712, 595-388, LE 1448-1238,

COBB DAVID G
522 NW LONA LOOP
LAKE CITY, FL 32055

2026

29-3S-16-02391-022

COLUMBIA COUNTY PROPERTY

BUILDING CHARACTERISTICS

ELEMENT	CD	CONSTRUCTION
Exterior Wall	19	COMMON BRK 100
Roof Structur	03	GABLE/HIP 100
Roof Cover	03	COMP SHNGL 100
Interior Wall	05	DRYWALL 100
Interior Floo	14	CARPET 100
Air Condition	03	CENTRAL 100
Heating Type	04	AIR DUCTED 100
Bedrooms		3 100
Bathrooms		3 100
Frame	01	NONE 100
Stories	1.	1. 100
Architectual	05	CONV 100
Units		0 100
Condition Adj	03	03 100
Kitchen Adjus	01	01 100
Quality	05	05
DOR CODE	0100	SINGLE FAMILY
MAP NUM		MKT AREA 01
NEIGHBORHOOD/LOC	29316.020	1.00/

AREA TYPE	TOTAL GROSS AREA	PCT OF BASE	YEAR	TOT ADJ AREA	SUBAREA MARKET VALUE
BAS	352	100		352	28,088
BAS	2,724	100		2,724	217,359
FGR	780	55		429	34,232
FOP	54	30		16	1,277
FOP	264	30		79	6,304
UBM	728	20		146	11,650
TOTALS	4,902			3,746	298,908

MARKET ADJUSTMENTS

TYPE	MDL	EFF. AREA	TOT ADJ PTS	EFF. BASE RATE	REPL. COST NEW	AYB	EYB	ECON	FNCT		NORM	% COND
0100	01	3,746	109.6100	122.76	459,859	1986	1986	0	0	0	35.00	65.00

1 SINGLE FAM 100% - 0 Heated Area: 3076 HX Base Yr

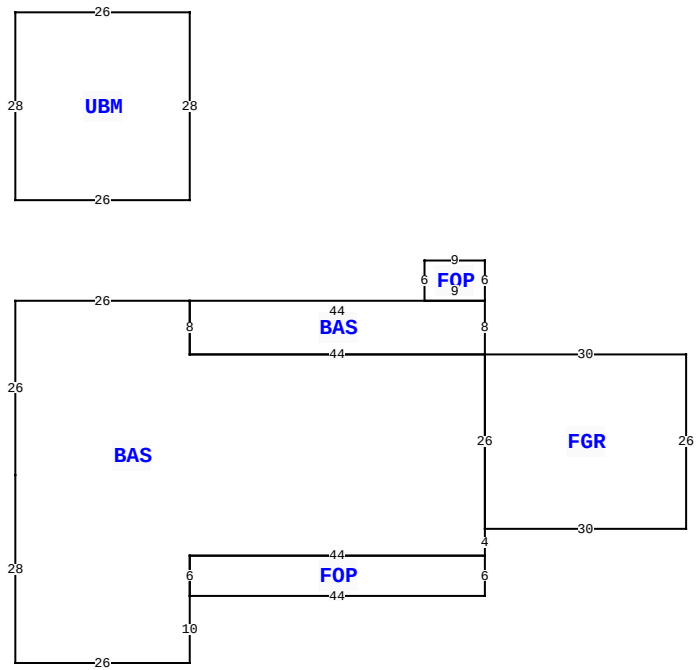

522 NW LONA LOOP, LAKE CITY

BLD DATE		LGL DATE	
XF DATE		LAND DATE	04/07/2025 MLU
INC DATE		AG DATE	

VALUATION SUMMARY

VALUATION BY		STANDARD
Tax Group: 3	Tax Dist:	
BUILDING MARKET VALUE		298,908
TOTAL MARKET OB/XF VALUE		19,970
TOTAL LAND VALUE - MARKET		44,600
TOTAL MARKET VALUE		363,478
SOH/AGL Deduction		124,143
ASSESSED VALUE		239,335
TOTAL EXEMPTION VALUE	HX HB WR	55,722
BASE TAXABLE VALUE		183,613
TOTAL JUST VALUE		363,478
NCON VALUE		0
INCOME VALUE		
PREVIOUS YEAR MKT VALUE		363,478

PERMIT NUM	DESCRIPTION	AMT	ISSUED
000050043	Storage Building	22,000	06/05/2024
000049968	Right-of-Way Acce		05/28/2024
39324	PUMP/UTPOL	0	02/20/2020
29142	ADDN SFR	300	01/26/2011

SALES DATA

OFF RECORD Number	DATE	TYPE INST	Q U /	V I /	RSN CD	SALE PRICE
1448/1238	9/23/2021	LE	U	I	14	100
GRANTOR: COBB DAVID						
GRANTEE: COBB DAVID G						
0595/0388	6/01/1986	WD	Q	V	01	17,500
GRANTOR:						
GRANTEE:						

EXTRA FEATURES

LN	OB/XF CODE	DESCRIPTION	BLD	CAP	L	W	UNITS	UT	Adj R	ADJ UNIT PRICE	ORIG COND	YEAR ON	YEAR ACTUAL	Q	% COND	OB/XF MKT VALUE	NOTES
1	0166	CONC,PAVMT	0	100	0	0	1.00	UT	0.00	0.00	100	0	0	3	100	2,470	
2	0180	FPLC 1STRY	0	100	0	0	1.00	UT	2,000.00	2,000.00	100	0	0	3	100	2,000	
3	0296	SHED METAL	0	100	0	0	1.00	UT	2,000.00	2,000.00	100	2023	2022		100	2,000	
4	0030	BARN,MT	0	100	25	30	750.00	UT	18.00	18.00	100	2025	2024		100	13,500	

BUILDING NOTES

BUILDING DIMENSIONS

BAS= W26 S26 S28 E26 N10 FOP= E44 N6 W44 S6$ N6 E44 N4 FGR= E30 N26 W30 S26$ N26 BAS= N8 FOP= N6 W9 S6 E9$ W44 S8 E44$ W44 N8$ PTR=N15 UBM= N28 W26 S28 E26$S15$.

LAND DESCRIPTION

TOTAL OB/XF 19,970

LN	USE CODE	CLS	LAND USE DESCRIPTION	CAP	RD	LOC ZONE	FRONT	DEPTH	TOT LND UTS	UNIT TYPE	DT	DPTH FACT	% COND	TOT ADJ	UNIT PRICE	ADJ UNIT PRICE	LAND VALUE	OTHER ADJUSTMENTS AND NOTES	YEAR	DENSITY	DECL	FRZ	YR	CONSRV
1	0100	C	SFR	100		A-3	0.00	0.00	2.23	AC		1.00	1.00	1.00	20,000.00	20,000.00	44,600							

REVIEW DATE 09/17/2024 BY JB Total Acres: 2.23 Total Land Value: 44,600 Market: 0 Agricultural: 0 Common: 44,600 PRINTED 11/18/2025 BY SYS