COMM NW COR, RUN S 76.28 FT TO S
E ALONG R/W 911.82 FT FOR POB, C
FT, S 617.14 FT, W 424.56 FT, N

SANDAGE ALBERT J/SANDAGE DONNA C
200 SW SOUNDLESS COURT
LAKE CITY, FL 32024

2026

28-4S-16-03234-001

COLUMBIA COUNTY PROPERTY

BUILDING CHARACTERISTICS

ELEMENT	CD	CONSTRUCTION
Exterior Wall	31	VINYL SID 100
Roof Structur	08	IRREGULAR 100
Roof Cover	03	COMP SHNGL 100
Interior Wall	05	DRYWALL 100
Interior Floo	14	CARPET 90
Interior Floo	12	HARDWOOD 10
Air Condition	03	CENTRAL 100
Heating Type	04	AIR DUCTED 100
Bedrooms		3 100
Bathrooms		3 100
Frame		N/A 100
Stories	1.	1. 100
Architectual	05	CONV 100
Units		0 100
Condition Adj	03	03 100
Kitchen Adjus	01	01 100
Quality	05	05
DOR CODE	0100	SINGLE FAMILY
MAP NUM		MKT AREA 01
NEIGHBORHOOD/LOC	28416.00	1.00/

AREA TYPE	TOTAL GROSS AREA	PCT OF BASE	YEAR	TOT ADJ AREA	SUBAREA MARKET VALUE
BAS	1,946	100		1,946	154,659
FGR	504	55		277	22,015
FOP	469	30		141	11,206
FOP	638	30		191	15,180
FSP	56	40		22	1,749
TOTALS	3,613			2,577	204,808

MARKET ADJUSTMENTS

TYPE	MDL	EFF. AREA	TOT ADJ PTS	EFF. BASE RATE	REPL. COST NEW	AYB	EYB	ECON	FNCT		NORM	% COND
0100	01	2,577	109.1720	122.27	315,090	1997	1997	0	0	0	35.00	65.00

1 SINGLE FAM 100% - 1998 Heated Area: 1946 HX Base Yr 1998

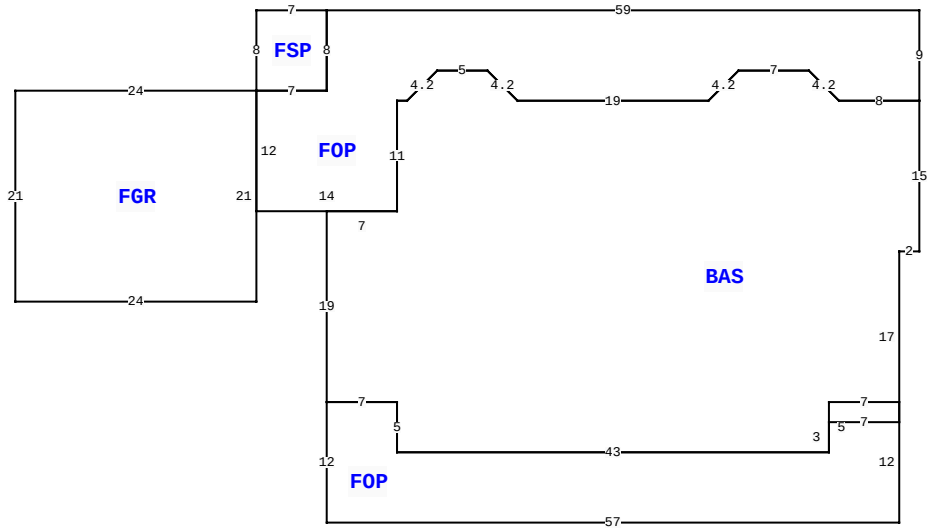

200 SW SOUNDLESS CT, LAKE CITY

BLD DATE		LGL DATE	
XF DATE		LAND DATE	04/07/2025 MLU
INC DATE		AG DATE	

VALUATION SUMMARY

VALUATION BY		STANDARD
Tax Group: 3	Tax Dist:	
BUILDING MARKET VALUE		204,808
TOTAL MARKET OB/XF VALUE		21,257
TOTAL LAND VALUE - MARKET		67,410
TOTAL MARKET VALUE		293,475
SOH/AGL Deduction		91,791
ASSESSED VALUE		201,684
TOTAL EXEMPTION VALUE	HX HB	50,722
BASE TAXABLE VALUE		150,962
TOTAL JUST VALUE		293,475
NCON VALUE		0
INCOME VALUE		
PREVIOUS YEAR MKT VALUE		297,414

SALE:1:1: 6.0 AC PRCL

PERMIT NUM	DESCRIPTION	AMT	ISSUED
000041886	Roof Replacement	24,723	05/11/2021
19982	POOL	130	09/23/2002
12530	SFR	315	05/20/1997

SALES DATA

OFF RECORD Number	DATE	TYPE INST	Q U	V I	RSN CD	SALE PRICE
0904/2211	6/17/2000	WD	Q	V	03	7,000
GRANTOR: SHANNON & RECHIELLE D						
GRANTEE: JAMES A & DONNA SAN						
0830/0682	10/30/1996	WD	Q	V		25,000
GRANTOR: NORRIS						
GRANTEE: SANDAGE						

BUILDING NOTES

BUILDING DIMENSIONS

BAS= N15 FOP= N9 W59 FSP= W7 S8 E7 N8$ S8 W7 FGR= W24 S21 E24 N21$ S12 E14 N11 E1 U3 R3 E5 R3 D3 E19 U3 R3 E7 R3 D3 E8$ W8 U3 L3 W7 L3 D3 W19 U3 L3 W5 L3 D3 W1 S11 W7 S19 FOP= S12 E57 N12 W7 S5 W43 N5 W7$ E7 S5 E43N3 E7 N17 E2$.

EXTRA FEATURES

LN	OB/XF CODE	DESCRIPTION	BLD	CAP	L	W	UNITS	UT	Adj R	ADJ UNIT PRICE	ORIG COND	YEAR ON	YEAR ACTUAL	Q	% COND	OB/XF MKT VALUE	NOTES
1	0166	CONC,PAVMT	0	100	7	18	126.00	UT	1.50	1.50	100	1997	1997	3	100	189	
2	0280	POOL R/CON	0	100	16	32	512.00	UT	70.00	70.00	100	2002	2002	3	40	14,336	
3	0166	CONC,PAVMT	0	100	72	3	216.00	UT	2.00	2.00	100	1997	1997	3	100	432	
4	0296	SHED METAL	0	100	10	12	120.00	UT	5.00	5.00	100	1997	1997	3	100	600	
5	0296	SHED METAL	0	100	0	0	1.00	UT	0.00	0.00	100	2014	2014	3	100	600	
6	0060	CARPORT F	0	100	0	0	1.00	UT	0.00	0.00	100	2014	2014	3	100	2,600	
7	0169	FENCE/WOOD	0	100	0	0	1.00	UT	0.00	0.00	100	2019	2019	3	100	1,500	
8	0262	PRCH,FOP	0	100	0	0	1.00	UT	0.00	0.00	100	2019	2019	3	100	1,000	

LAND DESCRIPTION

TOTAL OB/XF 21,257

LN	USE CODE	CLS	LAND USE DESCRIPTION	CAP	RD	LOC ZONE	FRONT	DEPTH	TOT LND UTS	UNIT TYPE	DT	DPTH FACT	% COND	TOT ADJ	UNIT PRICE	ADJ UNIT PRICE	LAND VALUE	OTHER ADJUSTMENTS AND NOTES	YEAR	DENSITY	DECL	FRZ	YR	CONSRV
1	0100	C	SFR	100		A-1	0.00	0.00	6.00	AC		1.00	1.00	1.00	9,000.00	9,000.00	54,000							
2	0000	C	VAC RES	100		A-1	0.00	0.00	1.49	AC		1.00	1.00	1.00	9,000.00	9,000.00	13,410							

REVIEW DATE 06/21/2021 BY JS Total Acres: 7.49 Total Land Value: 67,410 Market: 0 Agricultural: 0 Common: 67,410 PRINTED 11/18/2025 BY SYS