(AKA PRCL "B" DESC AS): COMM NW SW1/4, S 60 FT, RUN E ALONG S R/ (60-FT PROPOSED PUBLIC RD), 354.

LORD GERALD & HOPE LORD REVOCABLE TRUST
190 SW DUSK GLN
LAKE CITY, FL 32024

2026

28-4S-16-03220-102

COLUMBIA COUNTY PROPERTY

BUILDING CHARACTERISTICS

ELEMENT	CD	CONSTRUCTION
Exterior Wall	32	HARDIE BRD 80
Exterior Wall	19	COMMON BRK 20
Roof Structur	08	IRREGULAR 100
Roof Cover	03	COMP SHNGL 100
Interior Wall	05	DRYWALL 100
Interior Floo	12	HARDWOOD 80
Interior Floo	14	CARPET 20
Air Condition	03	CENTRAL 100
Heating Type	04	AIR DUCTED 100
Bedrooms		4 100
Bathrooms		3 100
Frame	02	WOOD FRAME 100
Stories	1.	1. 100
Architectual	05	CONV 100
Units		0 100
Quality	07	07
DOR CODE	0100	SINGLE FAMILY
MAP NUM		MKT AREA 01
NEIGHBORHOOD/LOC	28416.00	1.00/

AREA TYPE	TOTAL GROSS AREA	PCT OF BASE	YEAR	TOT ADJ AREA	SUBAREA MARKET VALUE
BAS	336	100		336	40,987
BAS	2,516	100		2,516	306,916
FGR	718	55		395	48,184
FSP	64	40		26	3,172
FSP	355	40		142	17,322
FSP	588	40		235	28,667
TOTALS	4,577			3,650	445,247

MARKET ADJUSTMENTS

TYPE	MDL	EFF. AREA	TOT ADJ PTS	EFF. BASE RATE	REPL. COST NEW	AYB	EYB	ECON	FNCT		NORM	% COND
0100	01	3,650	123.7720	138.62	505,963	2013	2013	0	0	0	12.00	88.00

1 SINGLE FAM 100% - 2018 Heated Area: 2852 HX Base Yr 2018

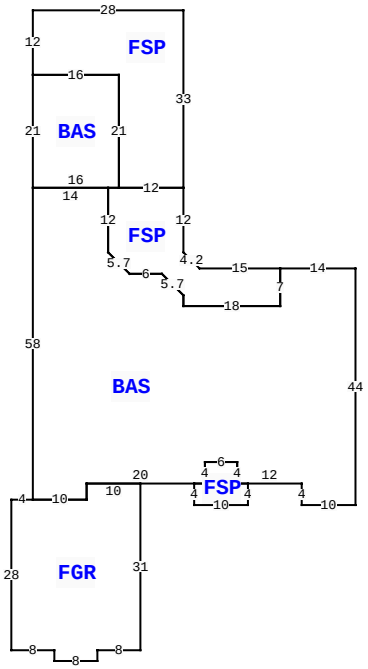

190 SW DUSK GLN, LAKE CITY

BLD DATE		LGL DATE	
XF DATE		LAND DATE	04/07/2025 MLU
INC DATE		AG DATE	

VALUATION SUMMARY

VALUATION BY		STANDARD
Tax Group: 3	Tax Dist:	
BUILDING MARKET VALUE		445,247
TOTAL MARKET OB/XF VALUE		9,480
TOTAL LAND VALUE - MARKET		89,550
TOTAL MARKET VALUE		466,893
SOH/AGL Deduction		275,647
ASSESSED VALUE		191,246
TOTAL EXEMPTION VALUE	HX HB DX	55,722
BASE TAXABLE VALUE		135,524
TOTAL JUST VALUE		544,277
NCON VALUE		0
INCOME VALUE		
PREVIOUS YEAR MKT VALUE		549,337

PERMIT NUM	DESCRIPTION	AMT	ISSUED
000051525	Generator	0	11/15/2024
000051212	Roof Replacement	32,000	10/23/2024
34182	ADDN SFR	309	06/24/2016
31022	SFR	1,061	05/09/2013

SALES DATA

OFF RECORD Number	DATE	TYPE INST	Q U /	V I /	RSN CD	SALE PRICE
1492/2274	6/14/2023	WD	Q	V	04	45,000
GRANTOR: NORRIS FREDERICK W						
GRANTEE: LORD GERALD W AND H						
1336/0325	4/28/2017	WD	Q	I	01	370,000
GRANTOR: DALE A & WHITNEY W MO						
GRANTEE: GERALD W & HOPE E L						

BUILDING NOTES

BUILDING DIMENSIONS

BAS= W14 FSP= W15 U3 L3 N12 FSP= N33 W28 S12 E16 S21 E12$ W12 BAS= N21 W16 S21 E16$ W2 S12 D4 R4 E6 D4 R4 S2 E18 N7$ S7 W18 N2 L4 U4 W6 U4 L4 N12 W14 S58 FGR= W4 S28 E8 S2 E8 N2 E8 N31 W10 S3 W10$ E10 N3 E20 FSP= S4 E10 N4 W2 N4 W6 S4 W2$ E2 N4 E6 S4 E12 S4 E10 N44 $.

EXTRA FEATURES

LN	OB/XF CODE	DESCRIPTION	BLD	CAP	L	W	UNITS	UT	Adj R	ADJ UNIT PRICE	ORIG COND	YEAR ON	YEAR ACTUAL	Q	% COND	OB/XF MKT VALUE	NOTES
1	0190	FPLC PF	0	100	0	0	1.00	UT	1,200.00	1,200.00	100	2013	2013	3	100	1,200	
2	0166	CONC,PAVMT	0	100	0	0	1,140.00	UT	2.00	2.00	100	2013	2013	3	100	2,280	
3	0031	BARN,MT AE	0	100	26	30	1.00	UT	0.00	0.00	100	2019	2019	3	100	5,000	
4	0169	FENCE/WOOD	0	100	0	0	1.00	UT	0.00	0.00	100	2019	2019	3	100	1,000	

LAND DESCRIPTION

TOTAL OB/XF 9,480

LN	USE CODE	CLS	LAND USE DESCRIPTION	CAP	RD	LOC ZONE	FRONT	DEPTH	TOT LND UTS	UNIT TYPE	DT	DPTH FACT	% COND	TOT ADJ	UNIT PRICE	ADJ UNIT PRICE	LAND VALUE	OTHER ADJUSTMENTS AND NOTES	YEAR	DENSITY	DECL	FRZ	YR	CONSRV
1	0100	C	SFR	100			0.00	0.00	1.00	AC		1.00	1.00	1.00	9,000.00	9,000.00	9,000							
2	5500	A	TIMBER 2	0					4.00	AC		1.00	1.00	1.00	445.00	445.00	1,780							
3	6200	A	PASTURE 3	0					4.95	AC		1.00	1.00	1.00	280.00	280.00	1,386							
4	9910	M	MKT.VAL.AG	0					8.95	AC		1.00	1.00	1.00	9,000.00	9,000.00	80,550							

REVIEW DATE 11/25/2024 BY JS Total Acres: 9.95 Total Land Value: 12,166 Market: 80,550 Agricultural: 3,166 Common: 9,000 PRINTED 11/17/2025 BY SYS