COMM INTERS OF S R/W LINE OF CR-
OF NE1/4, RUN S 466.33 FT TO A M
NW COR OF LANDS DESC IN ORB 1062

YOUNG ACE D/YOUNG JULIA A
319 SW RALPH TERR
LAKE CITY, FL 32024

2026

28-4S-16-03220-011

COLUMBIA COUNTY PROPERTY

BUILDING CHARACTERISTICS

ELEMENT	CD	CONSTRUCTION
Exterior Wall	19	COMMON BRK 100
Roof Structur	08	IRREGULAR 100
Roof Cover	03	COMP SHNGL 100
Interior Wall	05	DRYWALL 100
Interior Floo	14	CARPET 80
Interior Floo	15	HARDTILE 20
Air Condition	03	CENTRAL 100
Heating Type	04	AIR DUCTED 100
Bedrooms		4 100
Bathrooms		3 100
Frame	02	WOOD FRAME 100
Stories	1.	1. 100
Architectual	05	CONV 100
Units		0 100
Condition Adj	03	03 100
Kitchen Adjus	01	01 100
Quality	07	07
DOR CODE	0100	SINGLE FAMILY
MAP NUM		MKT AREA 01
NEIGHBORHOOD/LOC	28416.00	1.00/

AREA TYPE	TOTAL GROSS AREA	PCT OF BASE	YEAR	TOT ADJ AREA	SUBAREA MARKET VALUE
BAS	400	100		400	47,457
BAS	588	100		588	69,762
BAS	2,272	100		2,272	269,557
FGR	700	55		385	45,677
FOP	80	30		24	2,848
FOP	252	30		76	9,017
FOP	333	30		100	11,864
TOTALS	4,625			3,845	456,182

MARKET ADJUSTMENTS

TYPE	MDL	EFF. AREA	TOT ADJ PTS	EFF. BASE RATE	REPL. COST NEW	AYB	EYB	ECON	FNCT		NORM	% COND
0100	01	3,845	124.6256	139.58	536,685	2006	2010	0	0	0	15.00	85.00

1 SINGLE FAM 100% - 2025 Heated Area: 3260 HX Base Yr 2025

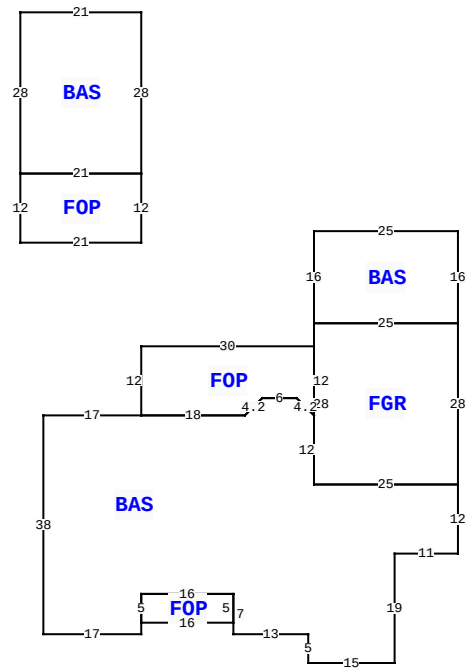

319 SW RALPH TER, LAKE CITY

BLD DATE		LGL DATE	
XF DATE		LAND DATE	04/07/2025 MLU
INC DATE		AG DATE	

VALUATION SUMMARY

VALUATION BY		STANDARD
Tax Group: 3	Tax Dist:	
BUILDING MARKET VALUE		456,182
TOTAL MARKET OB/XF VALUE		15,112
TOTAL LAND VALUE - MARKET		55,440
TOTAL MARKET VALUE		526,734
SOH/AGL Deduction		0
ASSESSED VALUE		526,734
TOTAL EXEMPTION VALUE	HX HB	50,722
BASE TAXABLE VALUE		476,012
TOTAL JUST VALUE		526,734
NCON VALUE		0
INCOME VALUE		
PREVIOUS YEAR MKT VALUE		532,101

PERMIT NUM	DESCRIPTION	AMT	ISSUED
24351	GARAGE	200	04/06/2006
24352	SFR	696	04/06/2006
19858	PUMP/UTPOL	30	08/15/2002

SALES DATA

OFF RECORD Number	DATE	TYPE INST	Q U	V I	RSN CD	SALE PRICE
1514/2401	4/24/2024	WD	U	I	11	0
GRANTOR: MOORE MELISSA						
GRANTEE: YOUNG ACE D						
1514/2397	4/24/2024	WD	Q	I	01	610,000
GRANTOR: NORRIS RALPH REVOCABL						
GRANTEE: YOUNG ACE D						

BUILDING NOTES

BUILDING DIMENSIONS

BAS= W17 S38 E17 N2 FOP= E16 N5 W16 S5$ N5 E16 S7 E13 S5 E15 N19 E11 N12 FGR= N28 BAS= N16 W25 S16 E25$ W25 S28 E25$ W25 N12 FOP= N12 W30 S12 E18 R3 U3 E6 D3 R3 $ L3 U3 W6 D3 L3 W18$ PTR= N30 FOP= N12 BAS= N28 W21 S28 E21$ W21 S12 E21$ S30$.

EXTRA FEATURES

LN	OB/XF CODE	DESCRIPTION	BLD	CAP	L	W	UNITS	UT	Adj R	ADJ UNIT PRICE	ORIG COND	YEAR ON	YEAR ACTUAL	Q	% COND	OB/XF MKT VALUE	NOTES
1	0166	CONC,PAVMT	0	100	0	0	4,204.00	UT	3.00	3.00	100	2006	2006	3	100	12,612	
2	0296	SHED METAL	0	100	0	0	1.00	UT	0.00	0.00	100	2007	2007	3	100	1,200	
3	0070	CARPORT UF	0	100	0	0	1.00	UT	0.00	0.00	100	2007	2007	3	100	800	
4	0169	FENCE/WOOD	0	100	0	0	1.00	UT	0.00	0.00	100	2014	2014	3	100	500	

LAND DESCRIPTION

TOTAL OB/XF 15,112

LN	USE CODE	CLS	LAND USE DESCRIPTION	CAP	RD	LOC ZONE	FRONT	DEPTH	TOT LND UTS	UNIT TYPE	DT	DPTH FACT	% COND	TOT ADJ	UNIT PRICE	ADJ UNIT PRICE	LAND VALUE	OTHER ADJUSTMENTS AND NOTES	YEAR	DENSITY	DECL	FRZ	YR	CONSRV
1	0100	C	SFR	100		A-1	0.00	0.00	1.00	AC		1.00	1.00	1.00	11,000.00	11,000.00	11,000							
2	0000	C	VAC RES	100		A-1	0.00	0.00	4.04	AC		1.00	1.00	1.00	11,000.00	11,000.00	44,440							

REVIEW DATE 05/28/2024 BY TP Total Acres: 5.04 Total Land Value: 55,440 Market: 0 Agricultural: 0 Common: 55,440 PRINTED 11/17/2025 BY SYS