N DIV: COMM 480 FT E OF NW COR O
SW1/4, RUN S 170 FT FOR POB, RUN
S 228 FT, W 102.4 FT, N 228 FT T

SHERWIN DIANNE
954 NE FAMU LN
LAKE CITY, FL 32055

2026

28-3S-17-11924-000

COLUMBIA COUNTY PROPERTY

BUILDING CHARACTERISTICS

ELEMENT	CD	CONSTRUCTION
Exterior Wall	15	CONC BLOCK 100
Roof Structur		N/A 100
Roof Cover	03	COMP SHNGL 100
Interior Wall	07	NONE 90
Interior Wall	05	DRYWALL 10
Interior Floo	03	CONC FINSH 100
Air Condition	02	WINDOW 100
Heating Type	04	AIR DUCTED 100
Bedrooms		1 100
Bathrooms		1 100
Frame	01	NONE 100
Stories	1.5	1.5 100
Architectual	05	CONV 100
Units		0 100
Condition Adj	03	03 100
Kitchen Adjus	01	01 100
Quality	05	05

DOR CODE	0100	SINGLE FAMILY	
MAP NUM		MKT AREA	07
NEIGHBORHOOD/LOC	830317.00	1.00/	

AREA TYPE	TOTAL GROSS AREA	PCT OF BASE	YEAR	TOT ADJ AREA	SUBAREA MARKET VALUE
BAS	720	100		720	11,301
PTO	64	5		3	47
UGR	1,386	45		624	9,794
UOP	76	20		15	235
UST	248	45		112	1,758
UST	464	45		209	3,280
UST	600	45		270	4,238
UST	4,665	45		2,099	32,946
TOTALS	8,223			4,052	63,600

MARKET ADJUSTMENTS

TYPE	MDL	EFF. AREA	TOT ADJ PTS	EFF. BASE RATE	REPL. COST NEW	AYB	EYB	ECON	FNCT	AP	NORM	% COND
0100	01	4,052	70.0728	78.48	318,001	1998	1998	10	0	75	33.75	20.00

1 SINGLE FAM 100% - 2022 Heated Area: 720 HX Base Yr 2022

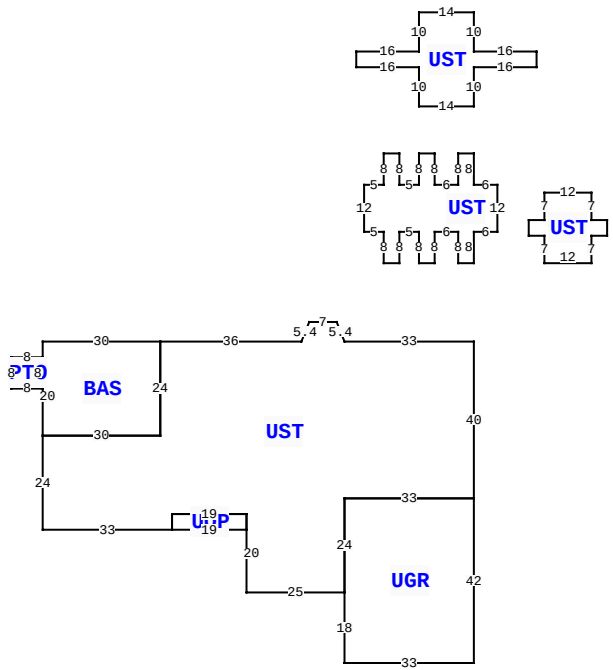

954 NE FAMU LN, LAKE CITY

BLD DATE	07/22/1998 CM	LGL DATE	
XF DATE		LAND DATE	
INC DATE		AG DATE	

VALUATION SUMMARY

VALUATION BY		STANDARD
Tax Group: 1	Tax Dist:	
BUILDING MARKET VALUE		63,600
TOTAL MARKET OB/XF VALUE		2,400
TOTAL LAND VALUE - MARKET		41,157
TOTAL MARKET VALUE		107,157
SOH/AGL Deduction		38,695
ASSESSED VALUE		68,462
TOTAL EXEMPTION VALUE	HX HB SX	64,919
BASE TAXABLE VALUE		3,543
TOTAL JUST VALUE		107,157
NCON VALUE		0
INCOME VALUE		
PREVIOUS YEAR MKT VALUE		107,157

PERMIT NUM	DESCRIPTION	AMT	ISSUED
039	SFR	60,000	03/23/1994

SALES DATA

OFF RECORD Number	DATE	TYPE INST	Q U	V I	RSN CD	SALE PRICE
1448/1517	4/19/2021	WD	U	I	11	100
GRANTOR: BROWN GEROME						
GRANTEE: SHERWIN DIANNE						
1435/919	4/19/2021	QC	U	V	11	100
GRANTOR: VANN MINNIE CARTER						
GRANTEE: BROWN GEROME						

BUILDING NOTES

BUILDING DIMENSIONS

UST= W33 U5 L2 W7 L2 D5 W36 BAS= W30 S4 PTO= W8 S8 E8 N8$ S20 E30 N24$ S24 W30 S24 E33 UOP= E19 N4 W19 S4$ N4 E19 S20 E25 UGR= S18 E33 N42 W33 S24$ N24 E33 N40$ PTR= N20 UST= N8 E6 N12 W6 N8 W4 S8 W6 N8 W4 S8 W5 N8 W4 S8 W5 S12 E5 S8 E4 N8 E5 S8 E4 N8 E6 S8 E4$ S20$ PTR= N60 UST= N10 E16 N4 W16 N10 W14 S10 W16 S4 E16 S10 E14$ S60$ PTR= N20 E30 UST= N7 E4N4 W4 N7 W12 S7 W4 S4 E4 S7 E12$ S20 W30$.

EXTRA FEATURES

LN	OB/XF CODE	DESCRIPTION	BLD	CAP	L	W	UNITS	UT	Adj R	ADJ UNIT PRICE	ORIG COND	YEAR ON	YEAR ACTUAL	Q	% COND	OB/XF MKT VALUE	NOTES
1	0190	FPLC PF	0	100	0	0	1.00	UT	1,200.00	1,200.00	100	2012	2012	3	100	1,200	
2	0130	CLFENCE 5	0	0	0	0	1.00	UT	0.00	0.00	100	2012	2012	3	100	600	
3	0130	CLFENCE 5	0	100	0	0	1.00	UT	0.00	0.00	100	2012	2012	3	100	600	

LAND DESCRIPTION

TOTAL OB/XF 2,400

LN	USE CODE	CLS	LAND USE DESCRIPTION	CAP	RD	LOC ZONE	FRONT	DEPTH	TOT LND UTS	UNIT TYPE	DT	DPTH FACT	% COND	TOT ADJ	UNIT PRICE	ADJ UNIT PRICE	LAND VALUE	OTHER ADJUSTMENTS AND NOTES	YEAR	DENSITY	DECL	FRZ	YR	CONSRV
1	0100	C	SFR	100			0.00	0.00	19,800.00	SF		1.00	1.00	1.00	0.50	0.50	9,900							
2	9901	C	AC/XFOB	0			0.00	0.00	15,246.00	SF		1.00	1.00	1.00	0.50	0.50	7,623							
3	0000	C	VAC RES	100			0.00	0.00	47,269.00	SF		1.00	1.00	1.00	0.50	0.50	23,634							

REVIEW DATE 09/14/2015 BY DF Total Acres: 1.89 Total Land Value: 41,157 Market: 0 Agricultural: 0 Common: 41,157 PRINTED 11/19/2025 BY SYS