6 AC OFF E SIDE OF SE1/4 OF SE1/ END.

CROOKED PINES APARTMENTS AND RENTALS LLC
7479 NE 33RD WAY
HIGH SPRINGS, FL 32643

2026

28-3S-16-02379-000

BUILDING CHARACTERISTICS

ELEMENT	CD	CONSTRUCTION
Exterior Wall	19	COMMON BRK 100
Roof Structur	03	GABLE/HIP 100
Roof Cover	03	COMP SHNGL 100
Interior Wall	05	DRYWALL 100
Interior Floo	06	VINYL ASB 50
Interior Floo	14	CARPET 50
Air Condition	03	CENTRAL 100
Heating Type	04	AIR DUCTED 100
Bedrooms		2 100
Bathrooms		2 100
Frame		N/A 100
Story Height		9 100
RMS		0 100
Stories	0	0 100
Units		2 100
Condition Adj	03	03 100
Kitchen Adjus	01	01 100
Quality	05	05
DOR CODE	0800	MULTI-FAM <10
MAP NUM		MKT AREA 06
NEIGHBORHOOD/LOC	28316.00	1.00/

AREA TYPE	TOTAL GROSS AREA	PCT OF BASE	YEAR	TOT ADJ AREA	SUBAREA MARKET VALUE
BAS	2,017	100		2,017	95,748
BAS	2,017	100		2,017	95,748
BAS	2,017	100		2,017	95,748
BAS	2,017	100		2,017	95,748
FOP	27	30		8	380
FOP	27	30		8	380
FOP	27	30		8	380
FOP	27	30		8	380
FST	170	55		94	4,463
FST	170	55		94	4,463
TOTALS	9,656			8,516	404,261

MARKET ADJUSTMENTS

TYPE	MDL	EFF. AREA	TOT ADJ PTS	EFF. BASE RATE	REPL. COST NEW	AYB	EYB	ECON	FNCT	AP	NORM	% COND
2700	03	8,516	109.5000	93.08	792,669	1986	1986	0	0	10	39.00	51.00

1 DUPLEX 0% - 2025 Heated Area: 8068 HX Base Yr

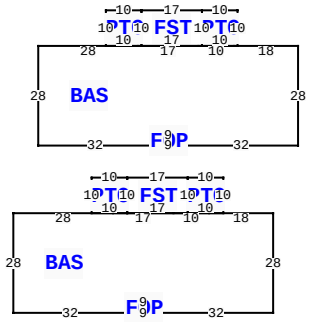

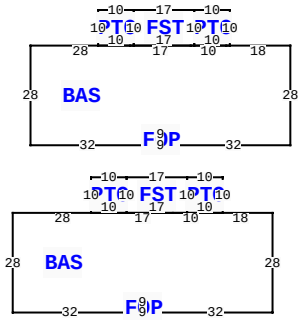

** This building has 20 Sub-Areas

638 NW TURNER AVE, LAKE CITY

BLD DATE		LGL DATE	
XF DATE		LAND DATE	04/10/2025 MLU
INC DATE		AG DATE	

COLUMBIA COUNTY PROPERTY

PAGE 1 of 2 2

VALUATION SUMMARY

VALUATION BY	STANDARD
Tax Group: 2	Tax Dist:
BUILDING MARKET VALUE	824,376
TOTAL MARKET OB/XF VALUE	19,600
TOTAL LAND VALUE - MARKET	40,000
TOTAL MARKET VALUE	883,976
SOH/AGL Deduction	0
ASSESSED VALUE	883,976
TOTAL EXEMPTION VALUE	0
BASE TAXABLE VALUE	883,976
TOTAL JUST VALUE	883,976
NCON VALUE	0
INCOME VALUE	
PREVIOUS YEAR MKT VALUE	899,829

PERMIT NUM	DESCRIPTION	AMT	ISSUED
000053194	Roof Replacement	10,000	05/21/2025
000053195	Roof Replacement	10,000	05/21/2025
000053196	Roof Replacement	10,000	05/21/2025
000053197	Roof Replacement	10,000	05/21/2025
000053198	Roof Replacement	10,000	05/21/2025
000053199	Roof Replacement	10,000	05/21/2025

SALES DATA

OFF RECORD Number	DATE	TYPE INST	Q / U	V / I	RSN CD	SALE PRICE
1551/2301	10/10/2025	QC	U	I	11	100
GRANTOR: TIMMONS TRAVIS						
GRANTEE: CROOKED PINES APART						
1515/525	5/20/2024	TR	U	I	11	100
GRANTOR: TIMMONS CHARLES REVOC						
GRANTEE: TIMMONS TRAVIS						

BUILDING NOTES

EXTRA FEATURES

LN	OB/XF CODE	DESCRIPTION	BLD	CAP	L	W	UNITS	UT	Adj R	ADJ UNIT PRICE	ORIG COND	YEAR ON	YEAR ACTUAL	Q	% COND	OB/XF MKT VALUE	NOTES
1	0166	CONC,PAVMT	0	0	0	0	1.00	UT	0.00	0.00	100	0	0	3	100	17,600	
2	0296	SHED METAL	0	0	0	0	1.00	UT	0.00	0.00	100	0	0	3	100	2,000	

BUILDING DIMENSIONS

BAS=[ORIG=87,17] W18 W10 W17 W28 S28 E32 N3 E9 S3 E32 N28 $
BAS=[ORIG=92,-30] W18 W10 W17 W28 S28 E32 N3 E9 S3 E32 N28 $
BAS=[ORIG=-89,14] W18 W10 W17 W28 S28 E32 N3 E9 S3 E32 N28 $
BAS=[ORIG=-82,-33] W18 W10 W17 W28 S28 E32 N3 E9 S3 E32 N28 $
FST=[ORIG=63,17] N10 W17 S10 E17 $
FST=[ORIG=65,-30] N10 W17 S10 E17 $
FST=[ORIG=-113,14] N10 W17 S10 E17 $
FST=[ORIG=-109,-33] N10 W17 S10 E17 $
PTO=[ORIG=75,-30] N10 W10 S10 E10 $
PTO=[ORIG=73,17] N10 W10 S10 E10 $
PTO=[ORIG=46,17] N10 W10 S10 E10 $
PTO=[ORIG=-45,-80;ORIG=48,-30] N10 W10 S10 E10 $

LAND DESCRIPTION

TOTAL OB/XF 19,600

LN	USE CODE	CLS	LAND USE DESCRIPTION	CAP	RD	LOC ZONE	FRONT	DEPTH	TOT LND UTS	UNIT TYPE	DT	DPTH FACT	% COND	TOT ADJ	UNIT PRICE	ADJ UNIT PRICE	LAND VALUE	OTHER ADJUSTMENTS AND NOTES	YEAR	DENSITY	DECL	FRZ	YR	CONSRV
1	0800	C	MULTI-FAM	0		00	0.00	0.00	4.00	AC		1.00	1.00	1.00	10,000.00	10,000.00	40,000							

REVIEW DATE 06/10/2025 BY chuck Total Acres: 4.00 Total Land Value: 40,000 Market: 0 Agricultural: 0 Common: 40,000 PRINTED 11/17/2025 BY SYS

6 AC OFF E SIDE OF SE1/4 OF SE1/ END.

CROOKED PINES APARTMENTS AND RENTALS LLC
7479 NE 33RD WAY
HIGH SPRINGS, FL 32643

2026

28-3S-16-02379-000

BUILDING CHARACTERISTICS

ELEMENT	CD	CONSTRUCTION
Exterior Wall	19	COMMON BRK 100
Roof Structur	03	GABLE/HIP 100
Roof Cover	03	COMP SHNGL 100
Interior Wall	05	DRYWALL 100
Interior Floo	06	VINYL ASB 50
Interior Floo	14	CARPET 50
Air Condition	03	CENTRAL 100
Heating Type	04	AIR DUCTED 100
Bedrooms		2 100
Bathrooms		2 100
Frame		N/A 100
Story Height		9 100
RMS		0 100
Stories	0	0 100
Units		2 100
Condition Adj	03	03 100
Kitchen Adjus	01	01 100
Quality	05	05
DOR CODE	0800	MULTI-FAM <10
MAP NUM		MKT AREA 06
NEIGHBORHOOD/LOC	28316.00	1.00/

AREA TYPE	TOTAL GROSS AREA	PCT OF BASE	YEAR	TOT ADJ AREA	SUBAREA MARKET VALUE
BAS	2,017	100		2,017	99,503
BAS	2,017	100		2,017	99,503
BAS	2,017	100		2,017	99,503
BAS	2,017	100		2,017	99,503
FOP	27	30		8	395
FOP	27	30		8	395
FOP	27	30		8	395
FOP	27	30		8	395
FST	170	55		94	4,638
FST	170	55		94	4,638
TOTALS	9,656			8,516	420,115

MARKET ADJUSTMENTS

TYPE	MDL	EFF. AREA	TOT ADJ PTS	EFF. BASE RATE	REPL. COST NEW	AYB	EYB	ECON	FNCT	AP	NORM	% COND
2700	03	8,516	109.5000	93.08	792,669	1988	1988	0	0	10	37.00	53.00

2 DUPLEX 0% - 2025 Heated Area: 8068 HX Base Yr

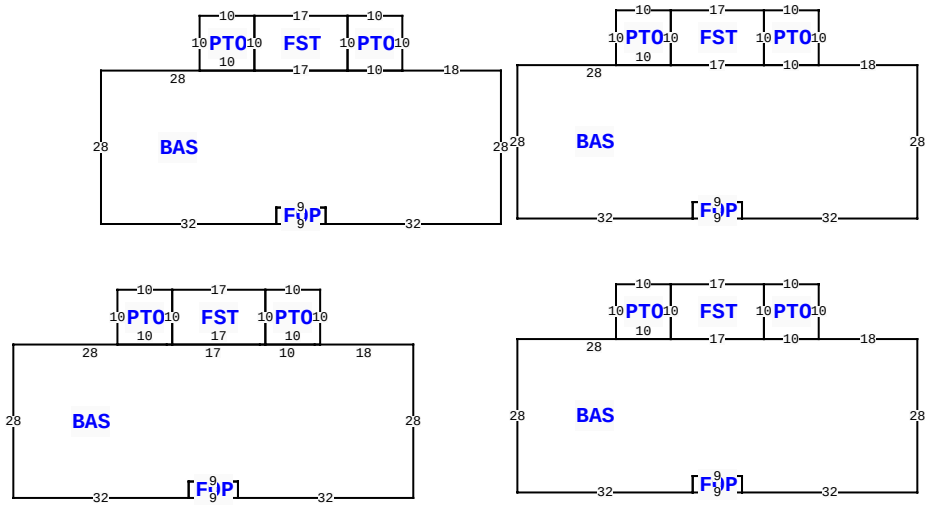

** This building has 20 Sub-Areas

638 NW TURNER AVE, LAKE CITY

BLD DATE		LGL DATE	
XF DATE		LAND DATE	04/10/2025 MLU
INC DATE		AG DATE	

COLUMBIA COUNTY PROPERTY

PAGE 2 of 2 2

VALUATION SUMMARY

VALUATION BY	STANDARD
Tax Group: 2	Tax Dist:
BUILDING MARKET VALUE	824,376
TOTAL MARKET OB/XF VALUE	19,600
TOTAL LAND VALUE - MARKET	40,000
TOTAL MARKET VALUE	883,976
SOH/AGL Deduction	0
ASSESSED VALUE	883,976
TOTAL EXEMPTION VALUE	0
BASE TAXABLE VALUE	883,976
TOTAL JUST VALUE	883,976
NCON VALUE	0
INCOME VALUE	
PREVIOUS YEAR MKT VALUE	899,829

PERMIT NUM	DESCRIPTION	AMT	ISSUED
000053200	Roof Replacement	10,000	05/21/2025
000053201	Roof Replacement	10,000	05/21/2025
000045283	Electrical Servic	0	08/25/2022

SALES DATA

OFF RECORD Number	DATE	TYPE INST	Q U	V I	RSN CD	SALE PRICE
1551/2301	10/10/2025	QC	U	I	11	100
GRANTOR: TIMMONS TRAVIS						
GRANTEE: CROOKED PINES APART						
1515/525	5/20/2024	TR	U	I	11	100
GRANTOR: TIMMONS CHARLES REVOC						
GRANTEE: TIMMONS TRAVIS						

BUILDING NOTES

EXTRA FEATURES

L N	OB/XF CODE	DESCRIPTION	BLD	CAP	L	W	UNITS	UT	Adj R	ADJ UNIT PRICE	ORIG COND	YEAR ON	YEAR ACTUAL	Q	% COND	OB/XF MKT VALUE	NOTES

BUILDING DIMENSIONS

BAS=[ORIG=0,0] W18 W10 W17 W28 S28 E32 N3 E9 S3 E32 N28 $
BAS=[ORIG=0,-50] W18 W10 W17 W28 S28 E32 N3 E9 S3 E32 N28 $
BAS=[ORIG=-92,1] W18 W10 W17 W28 S28 E32 N3 E9 S3 E32 N28 $
BAS=[ORIG=-76,-49] W18 W10 W17 W28 S28 E32 N3 E9 S3 E32 N28 $
FST=[ORIG=-28,0] N10 W17 S10 E17 $
FST=[ORIG=-28,-50] N10 W17 S10 E17 $
FST=[ORIG=-119,1] N10 W17 S10 E17 $
FST=[ORIG=-104,-49] N10 W17 S10 E17 $
PTO=[ORIG=-18,0] N10 W10 S10 E10 $
PTO=[ORIG=-45,0] N10 W10 S10 E10 $
PTO=[ORIG=-18,-50] N10 W10 S10 E10 $
PTO=[ORIG=-45,-50] N10 W10 S10 E10 $

LAND DESCRIPTION

TOTAL OB/XF 0

L N	USE CODE	CLS	LAND USE DESCRIPTION	CAP	R D	LOC ZONE	FRONT	DEPTH	TOT LND UTS	UNIT TYPE	D T	DPTH FACT	% COND	TOT ADJ	UNIT PRICE	ADJ UNIT PRICE	LAND VALUE	OTHER ADJUSTMENTS AND NOTES	YEAR	DENSITY	DECL	FRZ	YR	CONSRV

REVIEW DATE 06/10/2025 BY chuck Total Acres: 4.00 Total Land Value: 40,000 Market: 0 Agricultural: 0 Common: 40,000 PRINTED 11/17/2025 BY SYS