COMM SW COR OF SE1/4 OF SE1/4, E
N TO N LINE OF SE1/4 OF SE1/4, E
S LINE OF SEC, RUN W 265 FT TO P

TOMPKINS RET R
425 NW CANE MILL GLN
LAKE CITY, FL 32055

**2026**

**28-3S-16-02375-001**

## COLUMBIA COUNTY PROPERTY



## BUILDING CHARACTERISTICS

| ELEMENT | CD | CONSTRUCTION |
|---|---|---|
| Exterior Wall | 31 | VINYL SID 100 |
| Exterior Wall | 00 | N/A 0 |
| Roof Structur | 03 | GABLE/HIP 100 |
| Roof Cover | 03 | COMP SHNGL 100 |
| Interior Wall | 05 | DRYWALL 100 |
| Interior Floo | 08 | SHT VINYL 50 |
| Interior Floo | 14 | CARPET 50 |
| Air Condition | 03 | CENTRAL 100 |
| Heating Type | 04 | AIR DUCTED 100 |
| Bedrooms | | 4 100 |
| Bathrooms | | 3 100 |
| Frame | 01 | NONE 100 |
| Stories | 1. | 1. 100 |
| Units | | 0 100 |
| Condition Adj | 03 | 03 100 |
| Kitchen Adjus | 01 | 01 100 |
| Quality | 05 | 05 |
| DOR CODE | 5000 | IMPROVED AG |
| MAP NUM | | MKT AREA 06 |
| NEIGHBORHOOD/LOC | 28316.00 | 1.00/ |

| AREA TYPE | TOTAL GROSS AREA | PCT OF BASE | YEAR | TOT ADJ AREA | SUBAREA MARKET VALUE |
|---|---|---|---|---|---|
| BAS | 2,432 | 100 | 2026 | 2,432 | 267,795 |
| FOP | 84 | 35 | 2026 | 29 | 3,193 |
| TOTALS | 2,516 | | | 2,461 | 270,988 |

## MARKET ADJUSTMENTS

| TYPE | MDL | EFF. AREA | TOT ADJ PTS | EFF. BASE RATE | REPL. COST NEW | AYB | EYB | ECON | FNCT | | NORM | % COND |
|---|---|---|---|---|---|---|---|---|---|---|---|---|
| 0202 | 02 | 2,461 | 113.5000 | 112.36 | 276,518 | 2025 | 2025 | 0 | 0 | 0 | 2.00 | 98.00 |

2 MANUF 2 100% - 2026 Heated Area: 2432 HX Base Yr 2008

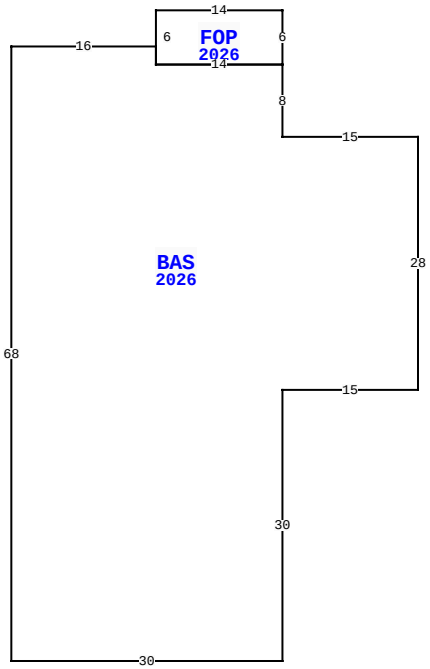


425 NW CANE MILL GLN, LAKE CITY

| | | | |
|---|---|---|---|
| BLD DATE | | LGL DATE | |
| XF DATE | | LAND DATE | |
| INC DATE | | AG DATE | |

## VALUATION SUMMARY

| | | |
|---|---|---|
| VALUATION BY | | STANDARD |
| Tax Group: 2 | Tax Dist: | |
| BUILDING MARKET VALUE | | 270,988 |
| TOTAL MARKET OB/XF VALUE | | 13,200 |
| TOTAL LAND VALUE - MARKET | | 48,000 |
| TOTAL MARKET VALUE | | 293,303 |
| SOH/AGL Deduction | | 5,998 |
| ASSESSED VALUE | | 287,305 |
| TOTAL EXEMPTION VALUE | HX HB | 50,722 |
| BASE TAXABLE VALUE | | 236,583 |
| TOTAL JUST VALUE | | 332,188 |
| NCON VALUE | | 273,988 |
| INCOME VALUE | | |
| PREVIOUS YEAR MKT VALUE | | 193,725 |

| PERMIT NUM | DESCRIPTION | AMT | ISSUED |
|---|---|---|---|
| 000052801 | Mobile Home | | 04/02/2025 |
| 000051535 | Roof Replacement | 10,450 | 11/15/2024 |
| 29806 | M H | 375 | 12/07/2011 |

## SALES DATA

| OFF RECORD Number | DATE | TYPE INST | Q U | V I | RSN CD | SALE PRICE |
|---|---|---|---|---|---|---|
| 1136/1091 | 11/15/2007 | WD | Q | I | 06 | 28,000 |
| GRANTOR: RODNEY E & TERESA B T | | | | | | |
| GRANTEE: RET R TOMPKINS | | | | | | |
| 0740/0372 | 1/07/1991 | WD | Q | V | 03 | 0 |
| GRANTOR: GEORGE TOMPKINS | | | | | | |
| GRANTEE: RODNEY TOMPKINS | | | | | | |

## BUILDING NOTES

## BUILDING DIMENSIONS

BAS=[YR=2026;ORIG=10,-10] N8 W14 N2 W16 S68 E30 N30 E15 N28 W15 $
FOP=[YR=2026;ORIG=-4,-24] E14 S6 W14 N6 $
.

## EXTRA FEATURES

| LN | OB/XF CODE | DESCRIPTION | BLD | CAP | L | W | UNITS | UT | Adj R | ADJ UNIT PRICE | ORIG COND | YEAR ON | YEAR ACTUAL | Q | % COND | OB/XF MKT VALUE | NOTES |
|---|---|---|---|---|---|---|---|---|---|---|---|---|---|---|---|---|---|
| 1 | 0296 | SHED METAL | 0 | 100 | 8 | 10 | 80.00 | UT | 5.00 | 5.00 | 100 | 1993 | 1993 | 3 | 100 | 400 | |
| 2 | 9945 | Well/Sept | 0 | 100 | 0 | 0 | 1.00 | UT | 7,000.00 | 7,000.00 | 100 | | | 3 | 100 | 7,000 | |
| 3 | 0296 | SHED METAL | 0 | 100 | 0 | 0 | 1.00 | UT | 2,500.00 | 2,500.00 | 100 | 2023 | 2022 | | 100 | 2,500 | |
| 4 | 0081 | DECKING WI | 0 | 100 | 0 | 0 | 1.00 | UT | 300.00 | 300.00 | 100 | 2023 | 2022 | | 100 | 300 | |
| 5 | 9947 | Septic | 0 | 100 | 0 | 0 | 1.00 | UT | 3,000.00 | 3,000.00 | 100 | 2026 | 2025 | | 100 | 3,000 | |

## LAND DESCRIPTION

TOTAL OB/XF 13,200

| LN | USE CODE | CLS | LAND USE DESCRIPTION | CAP | RD | LOC ZONE | FRONT | DEPTH | TOT LND UTS | UNIT TYPE | DT | DPTH FACT | % COND | TOT ADJ | UNIT PRICE | ADJ UNIT PRICE | LAND VALUE | OTHER ADJUSTMENTS AND NOTES | YEAR | DENSITY | DECL | FRZ | YR | CONSRV |
|---|---|---|---|---|---|---|---|---|---|---|---|---|---|---|---|---|---|---|---|---|---|---|---|---|
| 1 | 0200 | C | MBL HM | 100 | | 00 | 0.00 | 0.00 | 1.00 | AC | | 1.00 | 1.00 | 1.00 | 6,000.00 | 6,000.00 | 6,000 | | | | | | | |
| 2 | 5500 | A | TIMBER 2 | 0 | | 00 | 0.00 | 0.00 | 4.00 | AC | | 1.00 | 1.00 | 1.00 | 445.00 | 445.00 | 1,780 | | | | | | | |
| 3 | 5500 | A | TIMBER 2 | 0 | | 00 | 0.00 | 0.00 | 3.00 | AC | | 1.00 | 1.00 | 1.00 | 445.00 | 445.00 | 1,335 | | | | | | | |
| 4 | 9910 | M | MKT.VAL.AG | 0 | | | 0.00 | 0.00 | 7.00 | AC | | 1.00 | 1.00 | 1.00 | 6,000.00 | 6,000.00 | 42,000 | | | | | | | |

REVIEW DATE 06/10/2025 BY randall Total Acres: 8.00 Total Land Value: 9,115 Market: 42,000 Agricultural: 3,115 Common: 6,000 PRINTED 11/17/2025 BY SYS