LOTS 136 & 137 EMERALD LAKES PHA
814-1147, 840-1228, CT 863-696,

BATTEN CHRISTINE M/BATTEN STANLEY
476 NW ZACK DR
LAKE CITY, FL 32055

2026

28-3S-16-02372-437

COLUMBIA COUNTY PROPERTY

BUILDING CHARACTERISTICS

ELEMENT	CD	CONSTRUCTION
Exterior Wall	19	COMMON BRK 70
Exterior Wall	31	VINYL SID 30
Roof Structur	08	IRREGULAR 100
Roof Cover	03	COMP SHNGL 100
Interior Wall	05	DRYWALL 100
Interior Floo	14	CARPET 90
Interior Floo	08	SHT VINYL 10
Air Condition	03	CENTRAL 100
Heating Type	04	AIR DUCTED 100
Bedrooms		3 100
Bathrooms		2 100
Frame	01	NONE 100
Stories	1.	1. 100
Architectual	05	CONV 100
Units		0 100
Condition Adj	03	03 100
Kitchen Adjus	01	01 100
Quality	05	05
DOR CODE	0100	SINGLE FAMILY
MAP NUM		MKT AREA 06
NEIGHBORHOOD/LOC	28316.050	1.00/

AREA TYPE	TOTAL GROSS AREA	PCT OF BASE	YEAR	TOT ADJ AREA	SUBAREA MARKET VALUE
BAS	1,574	100		1,574	142,205
FGR	440	55		242	21,864
FOP	104	30		31	2,801
FSP	68	40		27	2,440
FSP	78	40		31	2,801
FSP	272	40		109	9,848
TOTALS	2,536			2,014	181,957

MARKET ADJUSTMENTS

TYPE	MDL	EFF. AREA	TOT ADJ PTS	EFF. BASE RATE	REPL. COST NEW	AYB	EYB	ECON	FNCT		NORM	% COND
0100	01	2,014	115.4000	129.25	260,310	1997	1997	0	0	0	30.10	69.90

1 SINGLE FAM 100% - 1999 Heated Area: 1574 HX Base Yr 1999

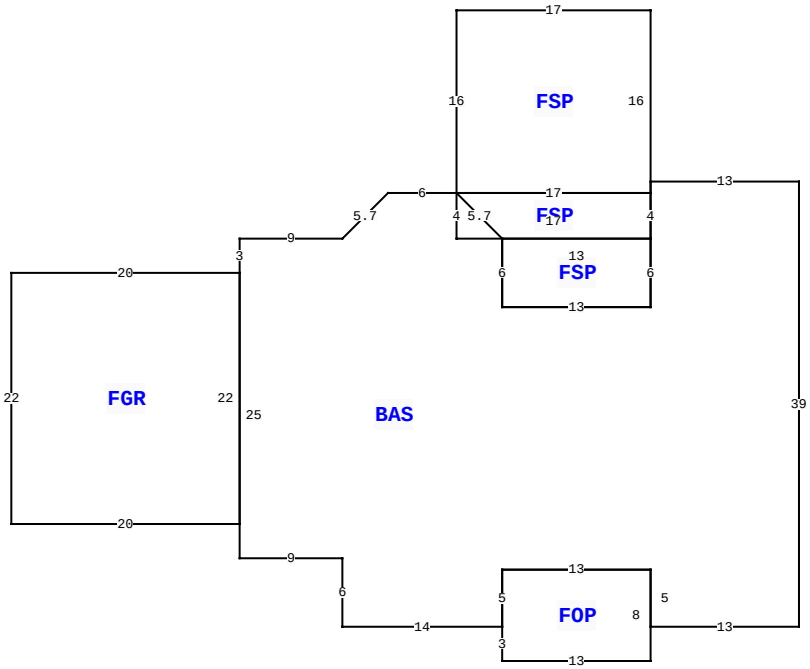

476 NW ZACK DR, LAKE CITY

BLD DATE		LGL DATE	
XF DATE		LAND DATE	04/03/2025 MLU
INC DATE		AG DATE	

VALUATION SUMMARY

VALUATION BY		STANDARD
Tax Group: 2	Tax Dist:	
BUILDING MARKET VALUE		181,957
TOTAL MARKET OB/XF VALUE		29,896
TOTAL LAND VALUE - MARKET		63,000
TOTAL MARKET VALUE		274,853
SOH/AGL Deduction		102,489
ASSESSED VALUE		172,364
TOTAL EXEMPTION VALUE	HX HB	50,722
BASE TAXABLE VALUE		121,642
TOTAL JUST VALUE		274,853
NCON VALUE		0
INCOME VALUE		
PREVIOUS YEAR MKT VALUE		279,250

PERMIT NUM	DESCRIPTION	AMT	ISSUED
22478	POOL	170	11/08/2004
12551	SFR	265	05/22/1997

SALES DATA

OFF RECORD Number	DATE	TYPE INST	Q U /	V I /	RSN CD	SALE PRICE
0909/1014	8/25/2000	WD	Q	V	03	8,600
GRANTOR: DDP CORP						
GRANTEE: BATTEN'S (Q?)						
0863/1009	7/29/1998	WD	Q	I		83,800
GRANTOR: B GOODSON						
GRANTEE: CHRISTIN & STAN BAT						

BUILDING NOTES

BUILDING DIMENSIONS

BAS= W13 S1 FSP= N16 W17 S16 E17$ FSP= W17 /S4/E17 N4$ S4 FSP= W13 S6 E13 N6$ S6 W13 N6 U4 L4 W6 L4 D4 W9 S3 FGR= W20 S22 E20 N22$ S25 E9 S6 E14 FOP= S3 E13 N8 W13 S5$ N5 E13 S5 E13 N39$.

EXTRA FEATURES

LN	OB/XF CODE	DESCRIPTION	BLD	CAP	L	W	UNITS	UT	Adj R	ADJ UNIT PRICE	ORIG COND	YEAR ON	YEAR ACTUAL	Q	% COND	OB/XF MKT VALUE	NOTES
1	0166	CONC,PAVMT	0	100	0	0	1,942.00	UT	1.50	1.50	100	1997	1997	3	100	2,913	
2	0120	CLFENCE 4	0	100	0	0	280.00	UT	4.50	4.50	75	1997	1997	3	75	945	
3	0280	POOL R/CON	0	100	18	32	576.00	UT	70.00	70.00	100	2004	2004	3	43	17,338	
4	0282	POOL ENCL	0	100	30	40	1,200.00	UT	15.00	15.00	100	2004	2004	3	40	7,200	
5	0070	CARPORT UF	0	100	0	0	1.00	UT	0.00	0.00	100	2004	2004	3	100	1,500	

LAND DESCRIPTION

TOTAL OB/XF 29,896

LN	USE CODE	CLS	LAND USE DESCRIPTION	CAP	RD	LOC ZONE	FRONT	DEPTH	TOT LND UTS	UNIT TYPE	DT	DPTH FACT	% COND	TOT ADJ	UNIT PRICE	ADJ UNIT PRICE	LAND VALUE	OTHER ADJUSTMENTS AND NOTES	YEAR	DENSITY	DECL	FRZ	YR	CONSRV
1	0100	C	SFR	100		00	0.00	0.00	1.00	LT		1.00	1.00	0.90	35,000.00	31,500.00	31,500							
2	0000	C	VAC RES	100		00	0.00	0.00	1.00	LT		1.00	1.00	0.90	35,000.00	31,500.00	31,500							

REVIEW DATE 09/05/2018 BY KR Total Acres: 1.00 Total Land Value: 63,000 Market: 0 Agricultural: 0 Common: 63,000 PRINTED 10/03/2025 BY SYS