LOT 8 EMERALD LAKES S/D.
789-808, 789-810, 881-2011, WD 1

WHITE DANIEL B/COOK LISA J
510 NW EMERALD LAKES DR
LAKE CITY, FL 32055

2026

28-3S-16-02372-108

COLUMBIA COUNTY PROPERTY

BUILDING CHARACTERISTICS

ELEMENT	CD	CONSTRUCTION
Exterior Wall	19	COMMON BRK 90
Exterior Wall	10	ABOVE AVG. 10
Roof Structur	08	IRREGULAR 100
Roof Cover	12	MODULAR MT 100
Interior Wall	05	DRYWALL 100
Interior Floo	14	CARPET 90
Interior Floo	11	CLAY TILE 10
Air Condition	03	CENTRAL 100
Heating Type	04	AIR DUCTED 100
Bedrooms		3 100
Bathrooms		2.5 100
Frame	01	NONE 100
Stories	1.	1. 100
Architectual	05	CONV 100
Units		0 100
Condition Adj	03	03 100
Kitchen Adjus	01	01 100
Quality	07	07
DOR CODE	0100	SINGLE FAMILY
MAP NUM		MKT AREA 06
NEIGHBORHOOD/LOC	28316.050	1.00/

AREA TYPE	TOTAL GROSS AREA	PCT OF BASE	YEAR	TOT ADJ AREA	SUBAREA MARKET VALUE
BAS	1,985	100		1,985	196,860
FEP	400	80		320	31,736
FGR	420	55		231	22,909
FOP	112	30		34	3,372
FSP	300	40		120	11,901
UDU	400	55		220	21,818
TOTALS	3,617			2,910	288,595

MARKET ADJUSTMENTS

TYPE	MDL	EFF. AREA	TOT ADJ PTS	EFF. BASE RATE	REPL. COST NEW	AYB	EYB	ECON	FNCT		NORM	% COND
0100	01	2,910	128.3260	143.73	418,254	1994	1994	0	0	0	31.00	69.00

1 SINGLE FAM 100% - 2020 Heated Area: 1985 HX Base Yr 2020

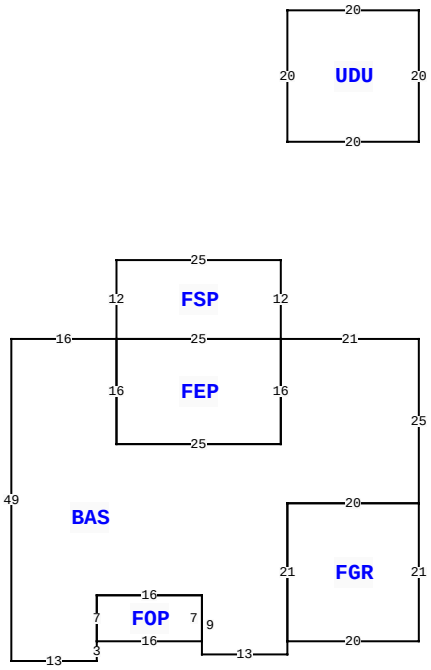

510 NW EMERALD LAKES DR, LAKE CITY

BLD DATE		LGL DATE	
XF DATE		LAND DATE	04/03/2025 MLU
INC DATE		AG DATE	

VALUATION SUMMARY

VALUATION BY		STANDARD
Tax Group: 2	Tax Dist:	
BUILDING MARKET VALUE		288,595
TOTAL MARKET OB/XF VALUE		6,172
TOTAL LAND VALUE - MARKET		35,000
TOTAL MARKET VALUE		329,767
SOH/AGL Deduction		101,062
ASSESSED VALUE		228,705
TOTAL EXEMPTION VALUE	HX HB	50,722
BASE TAXABLE VALUE		177,983
TOTAL JUST VALUE		329,767
NCON VALUE		0
INCOME VALUE		
PREVIOUS YEAR MKT VALUE		333,950

PERMIT NUM	DESCRIPTION	AMT	ISSUED
30530	MAINT/ALTR	35	10/17/2012

SALES DATA

OFF RECORD Number	DATE	TYPE INST	Q U	V I	RSN CD	SALE PRICE
1399/1491	11/22/2019	WD	Q	I	01	229,900
GRANTOR: BEUFORD L & JUSITH L						
GRANTEE: DANIEL B WHITE & LI						
0881/2011	6/01/1999	WD	Q	I		134,000
GRANTOR: J DEMIS						
GRANTEE: PATTERSON						

BUILDING NOTES

BUILDING DIMENSIONS

BAS= W21 FSP= N12 W25 S12 E25$ FEP= W25 S16 E25 N16$ S16 W25 N16 W16 S49 E13 N3 FOP= E16 N7 W16 S7$ N7 E16S9 E13 N2 FGR= E20 N21 W20 S21$ N21 E20 N25$ PTR= N30 UDU= N20 W20 S20 E20$ S30$.

EXTRA FEATURES

LN	OB/XF CODE	DESCRIPTION	BLD	CAP	L	W	UNITS	UT	Adj R	ADJ UNIT PRICE	ORIG COND	YEAR ON	YEAR ACTUAL	Q	% COND	OB/XF MKT VALUE	NOTES
1	0180	FPLC 1STRY	0	100	0	0	1.00	UT	2,000.00	2,000.00	100	0	0	3	100	2,000	
2	0166	CONC,PAVMT	0	100	0	0	1.00	UT	0.00	0.00	100	0	0	3	100	2,172	
3	0169	FENCE/WOOD	0	100	0	0	1.00	UT	0.00	0.00	100	1999	1999	3	100	1,200	
4	0081	DECKING WI	0	100	0	0	1.00	UT	800.00	800.00	100	2023	2022		100	800	

LAND DESCRIPTION

TOTAL OB/XF 6,172

LN	USE CODE	CLS	LAND USE DESCRIPTION	CAP	RD	LOC ZONE	FRONT	DEPTH	TOT LND UTS	UNIT TYPE	DT	DPTH FACT	% COND	TOT ADJ	UNIT PRICE	ADJ UNIT PRICE	LAND VALUE	OTHER ADJUSTMENTS AND NOTES	YEAR	DENSITY	DECL	FRZ	YR	CONSRV
1	0100	C	SFR	100		RSF-1	0.00	0.00	1.00	LT		1.00	1.00	1.00	35,000.00	35,000.00	35,000							

REVIEW DATE 03/10/2023 BY KS Total Acres: 0.69 Total Land Value: 35,000 Market: 0 Agricultural: 0 Common: 35,000 PRINTED 11/19/2025 BY SYS