LOT 1 SUWANNEE HILLS LOTS 19 & 20 REPLAT.

ALLEN RUTH ANN/ALLEN JAMES J
186 NW BUTTERMILK GLN
LAKE CITY, FL 32055

2026

28-2S-16-01772-146

COLUMBIA COUNTY PROPERTY

BUILDING CHARACTERISTICS

ELEMENT	CD	CONSTRUCTION
Exterior Wall	31	VINYL SID 100
Roof Structur	03	GABLE/HIP 100
Roof Cover	03	COMP SHNGL 100
Interior Wall	05	DRYWALL 100
Interior Floo	14	CARPET 90
Interior Floo	08	SHT VINYL 10
Air Condition	03	CENTRAL 100
Heating Type	04	AIR DUCTED 100
Bedrooms		3 100
Bathrooms		2 100
Frame	02	WOOD FRAME 100
Stories	1.	1. 100
Architectual	05	CONV 100
Units		0 100
Condition Adj	03	03 100
Kitchen Adjus	01	01 100
Quality	05	05
DOR CODE	0100	SINGLE FAMILY
MAP NUM		MKT AREA 03
NEIGHBORHOOD/LOC	28216.030	1.00/

AREA TYPE	TOTAL GROSS AREA	PCT OF BASE	YEAR	TOT ADJ AREA	SUBAREA MARKET VALUE
BAS	576	100		576	45,905
BAS	1,584	100		1,584	126,237
FGR	484	55		266	21,199
FOP	32	30		10	797
FSP	98	40		39	3,108
UGR	1,344	45		605	48,215
TOTALS	4,118			3,080	245,461

MARKET ADJUSTMENTS

TYPE	MDL	EFF. AREA	TOT ADJ PTS	EFF. BASE RATE	REPL. COST NEW	AYB	EYB	ECON	FNCT		NORM	% COND
0100	01	3,080	101.6560	113.85	350,658	2001	2001	0	0	0	30.00	70.00

1 SINGLE FAM 100% - 1998 Heated Area: 2160 HX Base Yr 1998

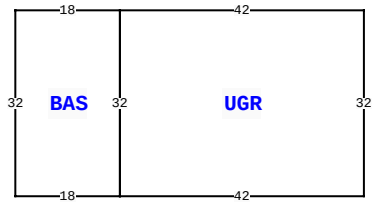

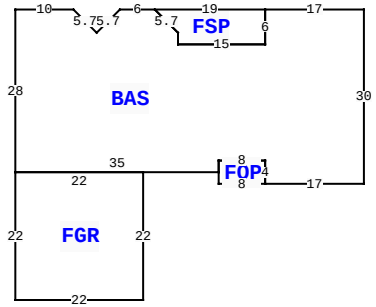

186 NW BUTTERMILK GLN, LAKE CITY

BLD DATE		LGL DATE	
XF DATE		LAND DATE	04/14/2025 MLU
INC DATE		AG DATE	

VALUATION SUMMARY

VALUATION BY		STANDARD
Tax Group: 3	Tax Dist:	
BUILDING MARKET VALUE		245,461
TOTAL MARKET OB/XF VALUE		16,269
TOTAL LAND VALUE - MARKET		40,000
TOTAL MARKET VALUE		301,730
SOH/AGL Deduction		108,664
ASSESSED VALUE		193,066
TOTAL EXEMPTION VALUE	HX HB	50,722
BASE TAXABLE VALUE		142,344
TOTAL JUST VALUE		301,730
NCON VALUE		0
INCOME VALUE		
PREVIOUS YEAR MKT VALUE		306,113

PERMIT NUM	DESCRIPTION	AMT	ISSUED
20027	M H	125	10/10/2002
11147	SFR	240	05/14/1996
11146	POOL	60	05/14/1996

SALES DATA

OFF RECORD Number	DATE	TYPE INST	Q U	V I	RSN CD	SALE PRICE
1292/1457	3/18/2015	QC	U	I	11	100
GRANTOR: RUTH ALLEN						
GRANTEE: RUTH ANN ALLEN & JA						
1290/1217	3/04/2015	QC	U	I	11	41,100
GRANTOR: RUTH ALLEN						
GRANTEE: RUTH ANN ALLEN & JA						

BUILDING NOTES

BUILDING DIMENSIONS

BAS= W17 FSP= W19 D4 R4 S2 E15 N6$ S6 W15 N2 L4 U4 W6 D4 L4 L4 U4 W10 S28 FGR= S22 E22 N22 W22$ E35 FOP= S2 E8 N4 W8 S2$ N2 E8 S4 E17 N30$ PTR= N30 UGR= N32 W42 BAS= W18 S32 E18 N32$ S32 E42$ S30$.

EXTRA FEATURES

LN	OB/XF CODE	DESCRIPTION	BLD	CAP	L	W	UNITS	UT	Adj R	ADJ UNIT PRICE	ORIG COND	YEAR ON	YEAR ACTUAL	Q	% COND	OB/XF MKT VALUE	NOTES
1	0280	POOL R/CON	0	100	10	24	240.00	UT	70.00	70.00	100	1998	1998	3	40	6,720	
2	0166	CONC,PAVMT	0	100	0	0	2,318.00	UT	1.50	1.50	100	1998	1998	3	100	3,477	
3	0282	POOL ENCL	0	100	22	46	1,012.00	UT	15.00	15.00	100	1998	1998	3	40	6,072	

LAND DESCRIPTION

TOTAL OB/XF 16,269

LN	USE CODE	CLS	LAND USE DESCRIPTION	CAP	RD	LOC ZONE	FRONT	DEPTH	TOT LND UTS	UNIT TYPE	DT	DPTH FACT	% COND	TOT ADJ	UNIT PRICE	ADJ UNIT PRICE	LAND VALUE	OTHER ADJUSTMENTS AND NOTES	YEAR	DENSITY	DECL	FRZ	YR	CONSRV
1	0100	C	SFR	100		A-1	0.00	0.00	1.00	LT		1.00	1.00	1.00	40,000.00	40,000.00	40,000							

REVIEW DATE 04/10/2023 BY kellen Total Acres: 6.32 Total Land Value: 40,000 Market: 0 Agricultural: 0 Common: 40,000 PRINTED 09/30/2025 BY SYS