LOT 25, BLOCK A, COUNTRY LANE
ESTATES S/D. 783-150, WD 1221
-1737, WD 1331-1464,

WILLIAMS QUINETTA
994 NW FIDDLERS LN
LAKE CITY, FL 32055-5577

2026

28-2S-16-01771-125

COLUMBIA COUNTY PROPERTY

BUILDING CHARACTERISTICS

ELEMENT	CD	CONSTRUCTION
Exterior Wall	19	COMMON BRK 100
Roof Structur	03	GABLE/HIP 100
Roof Cover	12	MODULAR MT 100
Interior Wall	05	DRYWALL 100
Interior Floo	14	CARPET 90
Interior Floo	08	SHT VINYL 10
Air Condition	03	CENTRAL 100
Heating Type	04	AIR DUCTED 100
Bedrooms		3 100
Bathrooms		2 100
Frame	01	NONE 100
Stories	1.	1. 100
Architectual	05	CONV 100
Units		0 100
Condition Adj	03	03 100
Kitchen Adjus	01	01 100
Quality	05	05
DOR CODE	0100	SINGLE FAMILY
MAP NUM		MKT AREA 03
NEIGHBORHOOD/LOC	28216.010	1.00/

AREA TYPE	TOTAL GROSS AREA	PCT OF BASE	YEAR	TOT ADJ AREA	SUBAREA MARKET VALUE
BAS	725	100		725	61,636
BAS	1,864	100		1,864	158,467
FGR	484	55		266	22,614
FGR	500	55		275	23,379
FOP	240	30		72	6,121
FSP	348	40		139	11,817
PTO	96	5		5	425
PTO	252	5		13	1,105
TOTALS	4,509			3,359	285,565

MARKET ADJUSTMENTS

TYPE	MDL	EFF. AREA	TOT ADJ PTS	EFF. BASE RATE	REPL. COST NEW	AYB	EYB	ECON	FNCT		NORM	% COND
0100	01	3,359	110.0100	123.21	413,862	1994	1994	0	0	0	31.00	69.00

1 SINGLE FAM 100% - 2012 Heated Area: 2589 HX Base Yr 2012

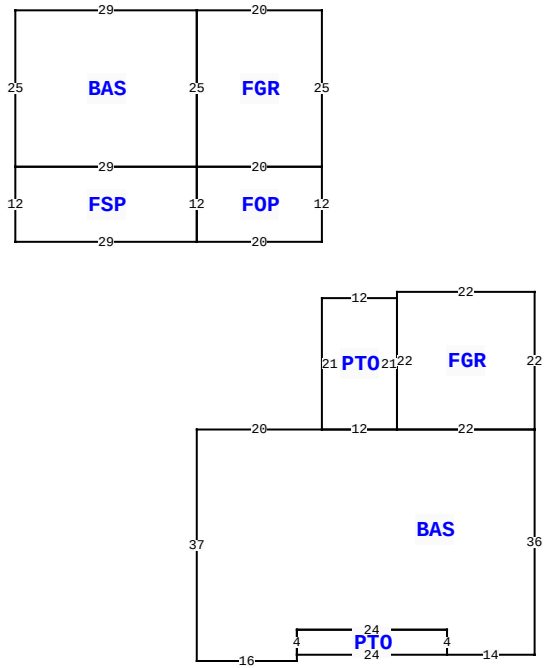

994 NW FIDDLERS LN, LAKE CITY

BLD DATE		LGL DATE	
XF DATE		LAND DATE	04/14/2025 MLU
INC DATE		AG DATE	

VALUATION SUMMARY

VALUATION BY		STANDARD
Tax Group: 3	Tax Dist:	
BUILDING MARKET VALUE		285,565
TOTAL MARKET OB/XF VALUE		3,700
TOTAL LAND VALUE - MARKET		45,000
TOTAL MARKET VALUE		334,265
SOH/AGL Deduction		123,025
ASSESSED VALUE		211,240
TOTAL EXEMPTION VALUE	HX HB	50,722
BASE TAXABLE VALUE		160,518
TOTAL JUST VALUE		334,265
NCON VALUE		0
INCOME VALUE		
PREVIOUS YEAR MKT VALUE		338,403

SALE:1:1: LOT 25 BLK A COUNTRY LANE LOWER THAN MAR

PERMIT NUM	DESCRIPTION	AMT	ISSUED
8024	M H	180	01/31/1994

SALES DATA

OFF RECORD Number	DATE	TYPE INST	Q U	V I	RSN CD	SALE PRICE
1331/1464	2/07/2017	WD	U	I	30	77,100
GRANTOR: KENDRICK B SINGLETON						
GRANTEE: QUINETTA WILLIAMS						
1221/1737	9/19/2011	WD	Q	I	01	175,000
GRANTOR: LENOVA STEWART						
GRANTEE: KENDRICK SINGLETON						

BUILDING NOTES

BUILDING DIMENSIONS

BAS= W20 S37 E16 N1 PTO= E24N4 W24 S4$ N4 E24 S4 E14 N36 FGR= N22 W22 S22 E22$ W22 PTO= N21 W12 S21 E12$ W12$ PTR= N30 FOP= N12 FGR= N25 W20 S25 E20$ W20 BAS= N25 W29 S25 E29$ FSP= W29 S12 E29 N12$ S12 E20$ S30$.

EXTRA FEATURES

LN	OB/XF CODE	DESCRIPTION	BLD	CAP	L	W	UNITS	UT	Adj R	ADJ UNIT PRICE	ORIG COND	YEAR ON	YEAR ACTUAL	Q	% COND	OB/XF MKT VALUE	NOTES
1	0190	FPLC PF	0	100	0	0	1.00	UT	1,200.00	1,200.00	100	0	0	3	100	1,200	
2	0120	CLFENCE 4	0	100	0	0	1.00	UT	0.00	0.00	100	1997	1997	3	100	1,000	
3	0166	CONC,PAVMT	0	100	0	0	1.00	UT	0.00	0.00	100	0	0	3	100	1,500	

LAND DESCRIPTION

TOTAL OB/XF 3,700

LN	USE CODE	CLS	LAND USE DESCRIPTION	CAP	RD	LOC ZONE	FRONT	DEPTH	TOT LND UTS	UNIT TYPE	DT	DPTH FACT	% COND	TOT ADJ	UNIT PRICE	ADJ UNIT PRICE	LAND VALUE	OTHER ADJUSTMENTS AND NOTES	YEAR	DENSITY	DECL	FRZ	YR	CONSRV
1	0100	C	SFR	100		A-1	0.00	0.00	1.00	LT		1.00	1.00	1.00	45,000.00	45,000.00	45,000							

REVIEW DATE 04/10/2023 BY kellen Total Acres: 5.01 Total Land Value: 45,000 Market: 0 Agricultural: 0 Common: 45,000 PRINTED 11/18/2025 BY SYS