LOT 2 BLOCK A COUNTRY LANE
ESTATES S/D, EX THE W 130 FT
OF THE N 300 FT OF LOT 2 DESC

PALMER JOHN R JR & NANCY M/PALMER NANCY
696 NW BAUGHN ST
LAKE CITY, FL 32055

2026

28-2S-16-01771-102

COLUMBIA COUNTY PROPERTY

BUILDING CHARACTERISTICS

ELEMENT	CD	CONSTRUCTION
Exterior Wall	31	VINYL SID 100
Roof Structur	03	GABLE/HIP 100
Roof Cover	12	MODULAR MT 100
Interior Wall	05	DRYWALL 100
Interior Floo	14	CARPET 80
Interior Floo	15	HARDTILE 20
Air Condition	03	CENTRAL 100
Heating Type	04	AIR DUCTED 100
Bedrooms		3 100
Bathrooms		2 100
Frame	01	NONE 100
Stories	2.	2. 100
Architectual	05	CONV 100
Units		0 100
Condition Adj	03	03 100
Kitchen Adjus	01	01 100
Quality	06	06
DOR CODE	0100	SINGLE FAMILY
MAP NUM		MKT AREA 03
NEIGHBORHOOD/LOC	28216.010	1.00/

AREA TYPE	TOTAL GROSS AREA	PCT OF BASE	YEAR	TOT ADJ AREA	SUBAREA MARKET VALUE
BAS	416	100		416	34,828
BAS	1,254	100		1,254	104,985
FOP	258	30		77	6,447
FOP	336	30		101	8,456
FUS	840	100		840	70,325
UGR	744	45		335	28,046
UOP	35	20		7	586
TOTALS	3,883			3,030	253,672

MARKET ADJUSTMENTS

TYPE	MDL	EFF. AREA	TOT ADJ PTS	EFF. BASE RATE	REPL. COST NEW	AYB	EYB	ECON	FNCT		NORM	% COND
0100	01	3,030	115.0018	128.80	390,264	1994	1994	0	0	0	35.00	65.00

2 SINGLE FAM 100% - 0 Heated Area: 2510 HX Base Yr

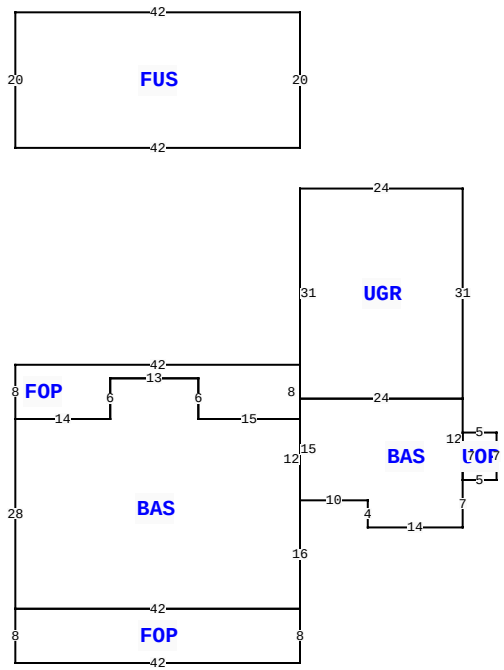

696 NW BAUGHN ST, LAKE CITY

BLD DATE		LGL DATE	
XF DATE		LAND DATE	05/17/2021 MLU
INC DATE		AG DATE	

VALUATION SUMMARY

VALUATION BY		STANDARD
Tax Group: 3	Tax Dist:	
BUILDING MARKET VALUE		253,672
TOTAL MARKET OB/XF VALUE		9,806
TOTAL LAND VALUE - MARKET		40,000
TOTAL MARKET VALUE		303,478
SOH/AGL Deduction		128,364
ASSESSED VALUE		175,114
TOTAL EXEMPTION VALUE	HX HB	50,722
BASE TAXABLE VALUE		124,392
TOTAL JUST VALUE		303,478
NCON VALUE		0
INCOME VALUE		
PREVIOUS YEAR MKT VALUE		303,478

SALE:2:1: LOT 2, BLK A, COUNTRY LANE ESTATES
BLDG:2:1: UUS TO FUS
SALE:1:1: WD REPLACING AGREEMENT

PERMIT NUM	DESCRIPTION	AMT	ISSUED
15731	GARAGE	60	07/02/1999

SALES DATA

OFF RECORD Number	DATE	TYPE INST	Q U	V I	RSN CD	SALE PRICE
1358/1105	4/17/2018	LE	U	I	14	100
GRANTOR: JOHN R & NANCY M PALM						
GRANTEE: M GLOVER, J PALMER						
0789/1097	3/28/1994	WD	U	V	12	11,500
GRANTOR: ROGERS-WOODLAND PARNE						
GRANTEE: JOHN R & NANCY M PA						

BUILDING NOTES

BUILDING DIMENSIONS

FOP= N8 W42 S8 E14 N6 E13 S6 E15$ BAS= W15 N6 W13 S6 W14 S28 FOP= S8 E42 N8 W42$ E42 N16 BAS= E10 S4 E14 N7 UOP= E5 N7 W5 S7$ N12 UGR= N31 W24 S31 E24$ W24 S15$ N12$ PTR= N40 FUS= N20 W42 S20 E42$ S40$.

EXTRA FEATURES

LN	OB/XF CODE	DESCRIPTION	BLD	CAP	L	W	UNITS	UT	Adj R	ADJ UNIT PRICE	ORIG COND	YEAR ON	YEAR ACTUAL	Q	% COND	OB/XF MKT VALUE	NOTES
1	0190	FPLC PF	0	100	0	0	1.00	UT	1,200.00	1,200.00	100	0	0	3	100	1,200	
2	0166	CONC,PAVMT	0	100	0	0	521.00	UT	1.50	1.50	100	2001	2001	3	100	782	
3	0021	BARN,FR AE	0	100	33	38	1,254.00	UT	6.00	6.00	100	1993	1993	3	100	7,524	
4	0252	LEAN-TO W/	0	100	0	0	1.00	UT	0.00	0.00	100	2013	2013	3	100	300	

LAND DESCRIPTION

TOTAL OB/XF 9,806

LN	USE CODE	CLS	LAND USE DESCRIPTION	CAP	RD	LOC ZONE	FRONT	DEPTH	TOT LND UTS	UNIT TYPE	DT	DPTH FACT	% COND	TOT ADJ	UNIT PRICE	ADJ UNIT PRICE	LAND VALUE	OTHER ADJUSTMENTS AND NOTES	YEAR	DENSITY	DECL	FRZ	YR	CONSRV
1	0100	C	SFR	100		A-1	0.00	0.00	1.00	LT		1.00	1.00	1.00	40,000.00	40,000.00	40,000							

REVIEW DATE 04/10/2023 BY kellen Total Acres: 4.11 Total Land Value: 40,000 Market: 0 Agricultural: 0 Common: 40,000 PRINTED 11/17/2025 BY SYS