LOT 6 SHADOW WOOD S/D UNIT 2.
756-1532, 804-2261, WD 1001-696,

BUCHANAN MELLISSA L
135 CANDLER COURT
LAKE CITY, FL 32024

2026

27-6S-17-09784-106

COLUMBIA COUNTY PROPERTY

BUILDING CHARACTERISTICS

ELEMENT	CD	CONSTRUCTION
Exterior Wall	31	VINYL SID 100
Roof Structur	03	GABLE/HIP 100
Roof Cover	03	COMP SHNGL 100
Interior Wall	05	DRYWALL 100
Interior Floo	08	SHT VINYL 100
Air Condition	03	CENTRAL 100
Heating Type	04	AIR DUCTED 100
Bedrooms		1 100
Bathrooms		1 100
Frame		N/A 100
Stories	1.	1. 100
Architectual	05	CONV 100
Units		0 100
Condition Adj	01	01 100
Kitchen Adjus	01	01 100
Quality	04	04
DOR CODE	0102	SFRES/MOBILE HOME
MAP NUM		MKT AREA 02
NEIGHBORHOOD/LOC	27617.010	1.00/

AREA TYPE	TOTAL GROSS AREA	PCT OF BASE	YEAR	TOT ADJ AREA	SUBAREA MARKET VALUE
BAS	400	100		400	25,337
FSP	160	40		64	4,054
FUS	200	100		200	12,669
UOP	160	20		32	2,027
TOTALS	920			696	44,086

MARKET ADJUSTMENTS

TYPE	MDL	EFF. AREA	TOT ADJ PTS	EFF. BASE RATE	REPL. COST NEW	AYB	EYB	ECON	FNCT		NORM	% COND
0100	01	696	87.0048	97.45	67,825	1996	1996	0	0	0	35.00	65.00

1 SINGLE FAM 0% - 2013 Heated Area: 600 HX Base Yr 2013

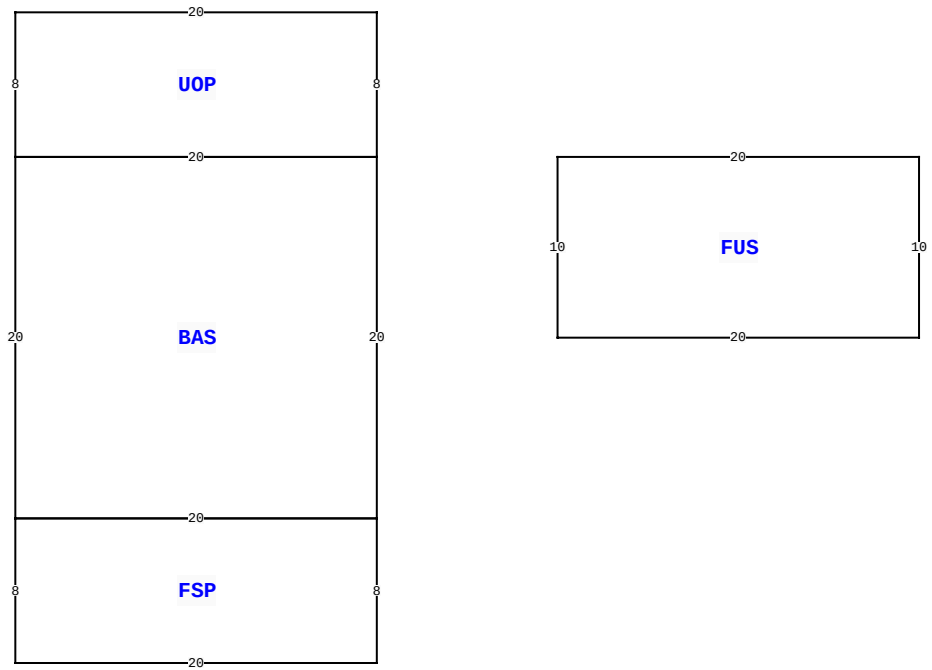

135 SE CANDLER CT, LAKE CITY

BLD DATE		LGL DATE	
XF DATE		LAND DATE	05/14/2024 MLU
INC DATE		AG DATE	

VALUATION SUMMARY

VALUATION BY		STANDARD
Tax Group: 3	Tax Dist:	
BUILDING MARKET VALUE		173,806
TOTAL MARKET OB/XF VALUE		8,760
TOTAL LAND VALUE - MARKET		50,200
TOTAL MARKET VALUE		232,766
SOH/AGL Deduction		73,322
ASSESSED VALUE		159,444
TOTAL EXEMPTION VALUE	HX HB	50,722
BASE TAXABLE VALUE		108,722
TOTAL JUST VALUE		232,766
NCON VALUE		0
INCOME VALUE		
PREVIOUS YEAR MKT VALUE		232,766

SALE:1:1: LOT 6 SHADOW WOOD UNIT II

PERMIT NUM	DESCRIPTION	AMT	ISSUED
000041814	Roof Replacement	10,679	04/27/2021
22142	M H	304	07/28/2004

SALES DATA

OFF RECORD Number	DATE	TYPE INST	Q U	V I	RSN CD	SALE PRICE
1240/0991	8/17/2012	WD	Q	I	01	130,000
GRANTOR: DONNA WALTERS						
GRANTEE: MELLISSA L BUCHANAN						
1240/0989	8/15/2012	QC	U	I	11	100
GRANTOR: ANDY ALAN & BRANDY LE						
GRANTEE: DONNA WALTERS						

BUILDING NOTES

BUILDING DIMENSIONS

UOP= N8 W20 S8 E20$ PTR= E10 FUS= E20 S10 W20 N10 $ W10 $
BAS= W20 S20 FSP= S8 E20N8 W20$ E20 N20$.

EXTRA FEATURES

LN	OB/XF CODE	DESCRIPTION	BLD	CAP	L	W	UNITS	UT	Adj R	ADJ UNIT PRICE	ORIG COND	YEAR ON	YEAR ACTUAL	Q	% COND	OB/XF MKT VALUE	NOTES
1	0070	CARPORT UF	0	100	18	20	360.00	UT	3.00	3.00	50	2004	2004	3	50	540	
2	0296	SHED METAL	0	100	14	30	420.00	UT	12.00	12.00	75	2004	2004	3	75	3,780	
3	0296	SHED METAL	0	100	10	12	120.00	UT	12.00	12.00	100	2004	2004	3	100	1,440	
4	9947	Septic	0	100	0	0	1.00	UT	3,000.00	3,000.00	100			3	100	3,000	

LAND DESCRIPTION

TOTAL OB/XF 8,760

LN	USE CODE	CLS	LAND USE DESCRIPTION	CAP	RD	LOC ZONE	FRONT	DEPTH	TOT LND UTS	UNIT TYPE	DT	DPTH FACT	% COND	TOT ADJ	UNIT PRICE	ADJ UNIT PRICE	LAND VALUE	OTHER ADJUSTMENTS AND NOTES	YEAR	DENSITY	DECL	FRZ	YR	CONSRV
1	0200	C	MBL HM	100		00	0.00	0.00	4.02	AC		1.00	1.00	1.00	10,000.00	10,000.00	40,200							
2	0100	C	SFR	0		00	0.00	0.00	1.00	AC		1.00	1.00	1.00	10,000.00	10,000.00	10,000							

REVIEW DATE 10/30/2017 BY BC Total Acres: 5.02 Total Land Value: 50,200 Market: 0 Agricultural: 0 Common: 50,200 PRINTED 11/18/2025 BY SYS

LOT 6 SHADOW WOOD S/D UNIT 2.
756-1532, 804-2261, WD 1001-696,

BUCHANAN MELLISSA L
135 CANDLER COURT
LAKE CITY, FL 32024

2026

27-6S-17-09784-106

COLUMBIA COUNTY PROPERTY

BUILDING CHARACTERISTICS

ELEMENT	CD	CONSTRUCTION
Exterior Wall	31	VINYL SID 100
Roof Structur		N/A 100
Roof Cover	03	COMP SHNGL 100
Interior Wall	05	DRYWALL 100
Interior Floo	14	CARPET 100
Air Condition	03	CENTRAL 100
Heating Type	04	AIR DUCTED 100
Bedrooms		4 100
Bathrooms		2 100
Stories	1.	1. 100
Architectual	01	CONV 100
Units		0 100
Condition Adj	03	03 100
Kitchen Adjus	01	01 100
Quality	05	05
DOR CODE	0102	SFRES/MOBILE HOME
MAP NUM		MKT AREA 02
NEIGHBORHOOD/LOC	27617.010	1.00/

AREA TYPE	TOTAL GROSS AREA	PCT OF BASE	YEAR	TOT ADJ AREA	SUBAREA MARKET VALUE
BAS	2,170	100		2,170	123,408
FOP	70	35		24	1,365
FOP	140	35		49	2,787
FSP	96	40		38	2,161
TOTALS	2,476			2,281	129,720

MARKET ADJUSTMENTS

TYPE	MDL	EFF. AREA	TOT ADJ PTS	EFF. BASE RATE	REPL. COST NEW	AYB	EYB	ECON	FNCT		NORM	% COND
0201	02	2,281	110.0000	103.40	235,855	2004	2004	0	0	0	45.00	55.00

2 MANUF 1 100% - 2013 Heated Area: 2170 HX Base Yr 2013

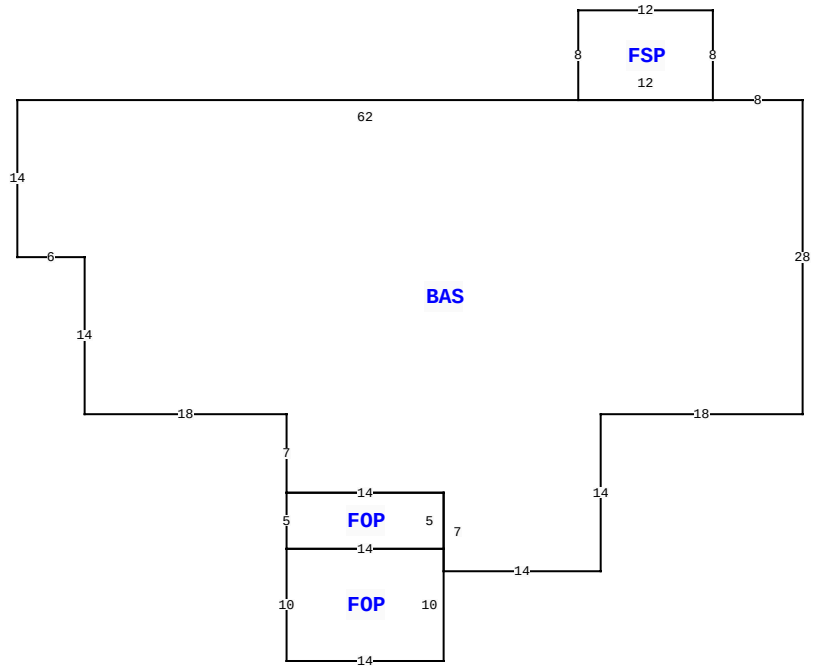

135 SE CANDLER CT, LAKE CITY

BLD DATE		LGL DATE	
XF DATE		LAND DATE	05/14/2024 MLU
INC DATE		AG DATE	

VALUATION SUMMARY

VALUATION BY		STANDARD
Tax Group: 3	Tax Dist:	
BUILDING MARKET VALUE		173,806
TOTAL MARKET OB/XF VALUE		8,760
TOTAL LAND VALUE - MARKET		50,200
TOTAL MARKET VALUE		232,766
SOH/AGL Deduction		73,322
ASSESSED VALUE		159,444
TOTAL EXEMPTION VALUE	HX HB	50,722
BASE TAXABLE VALUE		108,722
TOTAL JUST VALUE		232,766
NCON VALUE		0
INCOME VALUE		
PREVIOUS YEAR MKT VALUE		232,766

PERMIT NUM	DESCRIPTION	AMT	ISSUED

SALES DATA

OFF RECORD Number	DATE	TYPE INST	Q / U	V / I	RSN CD	SALE PRICE
1240/0991	8/17/2012	WD	Q	I	01	130,000
GRANTOR: DONNA WALTERS						
GRANTEE: MELLISSA L BUCHANAN						
1240/0989	8/15/2012	QC	U	I	11	100
GRANTOR: ANDY ALAN & BRANDY LE						
GRANTEE: DONNA WALTERS						

BUILDING NOTES

BUILDING DIMENSIONS

BAS= W8 FSP= N8 W12 S8 E12 $ W62 S14 E6 S14 E18 S7 FOP= S5
FOP= S10 E14 N10 W14 $ E14 N5 W14$ E14 S7 E14 N14 E18 N28$.

EXTRA FEATURES

L N	OB/XF CODE	DESCRIPTION	BLD	CAP	L	W	UNITS	UT	Adj R	ADJ UNIT PRICE	ORIG COND	YEAR ON	YEAR ACTUAL	Q	% COND	OB/XF MKT VALUE	NOTES

LAND DESCRIPTION

TOTAL OB/XF 0

L N	USE CODE	CLS	LAND USE DESCRIPTION	CAP	R D	LOC ZONE	FRONT	DEPTH	TOT LND UTS	UNIT TYPE	D T	DPTH FACT	% COND	TOT ADJ	UNIT PRICE	ADJ UNIT PRICE	LAND VALUE	OTHER ADJUSTMENTS AND NOTES	YEAR	DENSITY	DECL	FRZ	YR	CONSRV

REVIEW DATE 10/30/2017 BY BC Total Acres: 5.02 Total Land Value: 50,200 Market: 0 Agricultural: 0 Common: 50,200 PRINTED 11/18/2025 BY SYS