COMM AT SE COR OF W1/2 OF
SE1/4, RUN N 580.14 FT, RUN W
TO C/L OF DYAL RD, CONT W

SEXTON MICHAEL/SEXTON JENNIFER
1050 SW DYAL AVE
LAKE CITY, FL 32024-1554

2026

27-4S-16-03218-007

COLUMBIA COUNTY PROPERTY

BUILDING CHARACTERISTICS

ELEMENT	CD	CONSTRUCTION
Exterior Wall	19	COMMON BRK 100
Roof Structur	08	IRREGULAR 100
Roof Cover	03	COMP SHNGL 100
Interior Wall	05	DRYWALL 100
Interior Floo	12	HARDWOOD 80
Interior Floo	15	HARDTILE 20
Air Condition	03	CENTRAL 100
Heating Type	04	AIR DUCTED 100
Bedrooms		3 100
Bathrooms		2 100
Frame	02	WOOD FRAME 100
Stories	2.	2. 100
Architectual	05	CONV 100
Units		0 100
Quality	08	08

DOR CODE 0100 SINGLE FAMILY

MAP NUM | MKT AREA 01

NEIGHBORHOOD/LOC 27416.00 1.00/

AREA TYPE	TOTAL GROSS AREA	PCT OF BASE	YEAR	TOT ADJ AREA	SUBAREA MARKET VALUE
BAS	3,265	100		3,265	464,628
FGR	700	55		385	54,788
FOP	312	30		94	13,377
FOP	312	30		94	13,377
FSP	438	40		175	24,903
FUS	1,672	100		1,672	237,935
TOTALS	6,699			5,685	809,008

MARKET ADJUSTMENTS

TYPE	MDL	EFF. AREA	TOT ADJ PTS	EFF. BASE RATE	REPL. COST NEW	AYB	EYB	ECON	FNCT		NORM	% COND
0100	01	5,685	138.1086	154.68	879,356	2017	2017	0	0	0	8.00	92.00

1 SINGLE FAM 100% - 2018 Heated Area: 4937 HX Base Yr 2018

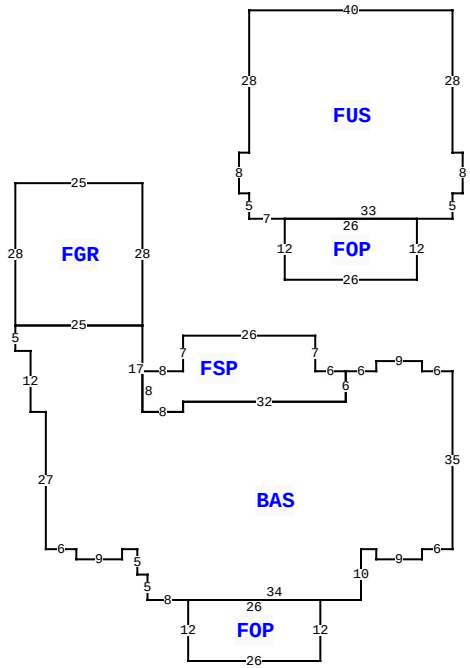

1050 SW DYAL AVE, LAKE CITY

BLD DATE		LGL DATE	
XF DATE		LAND DATE	04/07/2025 MLU
INC DATE		AG DATE	

VALUATION SUMMARY

VALUATION BY		STANDARD
Tax Group: 3	Tax Dist:	
BUILDING MARKET VALUE		809,008
TOTAL MARKET OB/XF VALUE		47,705
TOTAL LAND VALUE - MARKET		69,750
TOTAL MARKET VALUE		926,463
SOH/AGL Deduction		310,613
ASSESSED VALUE		615,850
TOTAL EXEMPTION VALUE	HX HB	50,722
BASE TAXABLE VALUE		565,128
TOTAL JUST VALUE		926,463
NCON VALUE		0
INCOME VALUE		
PREVIOUS YEAR MKT VALUE		936,054

SALE:1:1: SALE INCL RE# 3218-006

PERMIT NUM	DESCRIPTION	AMT	ISSUED
35328	POOL	263	05/17/2017
34458	SFR	1,858	09/16/2016

SALES DATA

OFF RECORD Number	DATE	TYPE INST	Q U	V I	RSN CD	SALE PRICE
1298/0484	7/15/2015	WD	Q	V	01	13,300
GRANTOR: JAMES H WEANT						
GRANTEE: MICHAEL & JENNIFER						
1298/0481	7/15/2015	WD	Q	V	01	30,000
GRANTOR: STANLEY B & TRACY J H						
GRANTEE: MICHAEL & JENNIFER						

BUILDING NOTES

BUILDING DIMENSIONS

BAS= W6 N2 W9 S2 W6 FSP= W6 N7 W26 S7 W8 S8 E8 N2 E32 N6$ S6 W32 S2 W8 N17 FGR= N28 W25 S28 E25$ W25 S5 E3 S12 E3 S27 E6 S2 E9 N2 E3 S5 E2 S5 E8 FOP= S12 E26 N12 W26$ E34 N10 E3 S2 E9 N2 E6 N35$ PTR= N30 FUS= N5 E2 N8 W2 N28 W40 S28 W2 S8 E2 S5 E7 FOP= S12 E26 N12 W26$ E33$ S30$.

EXTRA FEATURES

LN	OB/XF CODE	DESCRIPTION	BLD	CAP	L	W	UNITS	UT	Adj R	ADJ UNIT PRICE	ORIG COND	YEAR ON	YEAR ACTUAL	Q	% COND	OB/XF MKT VALUE	NOTES
1	0180	FPLC 1STRY	0	100	0	0	1.00	UT	2,000.00	2,000.00	100	2017	2017	3	100	2,000	
2	0280	POOL R/CON	0	100	0	0	570.00	UT	70.00	70.00	100	2017	2017	3	84	33,516	
3	0166	CONC,PAVMT	0	100	0	0	1,025.00	UT	2.00	2.00	100	2017	2017	3	100	2,050	
4	0260	PAVEMENT-A	0	100	0	0	7,799.00	UT	1.30	1.30	100	2017	2017	3	100	10,139	

LAND DESCRIPTION

TOTAL OB/XF 47,705

LN	USE CODE	CLS	LAND USE DESCRIPTION	CAP	RD	LOC ZONE	FRONT	DEPTH	TOT LND UTS	UNIT TYPE	DT	DPTH FACT	% COND	TOT ADJ	UNIT PRICE	ADJ UNIT PRICE	LAND VALUE	OTHER ADJUSTMENTS AND NOTES	YEAR	DENSITY	DECL	FRZ	YR	CONSRV
1	0100	C	SFR	100		A-1	0.00	0.00	5.17	AC		1.00	1.00	1.00	9,000.00	9,000.00	46,530							
2	0000	C	VAC RES	100		A-1	0.00	0.00	2.58	AC		1.00	1.00	1.00	9,000.00	9,000.00	23,220							

REVIEW DATE 07/16/2019 BY KR Total Acres: 7.75 Total Land Value: 69,750 Market: 0 Agricultural: 0 Common: 69,750 PRINTED 11/18/2025 BY SYS