COMM NW COR OF NE1/4, RUN S 37.1
CR-242, SAID PT BEING ON A CURVE
ALONG CURVE 299.38 FT, CONT E AL

CONDY R DALE/CONDY NATALIA
130 SE SURREAL CT
LAKE CITY, FL 32024

2026

27-4S-16-03208-005

COLUMBIA COUNTY PROPERTY

BUILDING CHARACTERISTICS

ELEMENT	CD	CONSTRUCTION
Exterior Wall	32	HARDIE BRD 100
Roof Structur	03	GABLE/HIP 100
Roof Cover	03	COMP SHNGL 100
Interior Wall	05	DRYWALL 100
Interior Floo	15	HARDTILE 60
Interior Floo	14	CARPET 40
Air Condition	03	CENTRAL 100
Heating Type	08	RAD WATER 100
Bedrooms		5 100
Bathrooms		3 100
Frame	02	WOOD FRAME 100
Stories	1.5	1.5 100
Architectual	05	CONV 100
Units		0 100
Condition Adj	03	03 100
Kitchen Adjus	01	01 100
Quality	06	06
DOR CODE	0100	SINGLE FAMILY
MAP NUM		MKT AREA 01
NEIGHBORHOOD/LOC	27416.00	1.00/

AREA TYPE	TOTAL GROSS AREA	PCT OF BASE	YEAR	TOT ADJ AREA	SUBAREA MARKET VALUE
BAS	2,329	100		2,329	246,472
FGR	600	55		330	34,923
FOP	288	30		86	9,101
FOP	294	30		88	9,313
FUS	340	100		340	35,981
TOTALS	3,851			3,173	335,791

MARKET ADJUSTMENTS

TYPE	MDL	EFF. AREA	TOT ADJ PTS	EFF. BASE RATE	REPL. COST NEW	AYB	EYB	ECON	FNCT		NORM	% COND
0100	01	3,173	127.6893	143.01	453,771	1999	1999	0	0	0	26.00	74.00

1 SINGLE FAM 100% - 2006 Heated Area: 2669 HX Base Yr 2006

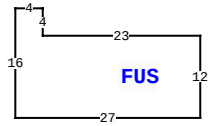

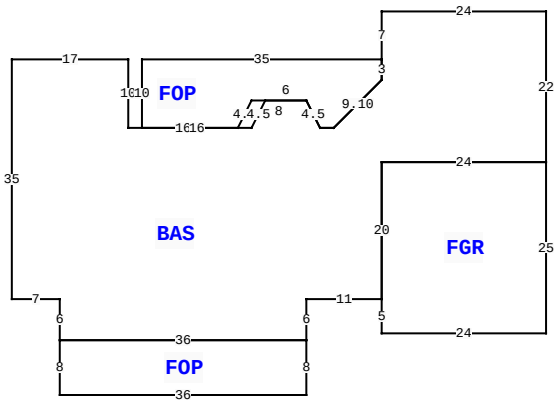

130 SW SURREAL CT, LAKE CITY

BLD DATE		LGL DATE	
XF DATE		LAND DATE	04/07/2025 MLU
INC DATE		AG DATE	

VALUATION SUMMARY

VALUATION BY		STANDARD
Tax Group: 3	Tax Dist:	
BUILDING MARKET VALUE		335,791
TOTAL MARKET OB/XF VALUE		23,616
TOTAL LAND VALUE - MARKET		58,630
TOTAL MARKET VALUE		418,037
SOH/AGL Deduction		119,721
ASSESSED VALUE		298,316
TOTAL EXEMPTION VALUE	13 HX HB	298,316
BASE TAXABLE VALUE		0
TOTAL JUST VALUE		418,037
NCON VALUE		0
INCOME VALUE		
PREVIOUS YEAR MKT VALUE		422,574

PERMIT NUM	DESCRIPTION	AMT	ISSUED
14869	SFR	415	12/21/1998

SALES DATA

OFF RECORD Number	DATE	TYPE INST	Q U	V I	RSN CD	SALE PRICE
1401/1769	12/20/2019	QC	U	I	11	100
GRANTOR: R. DALE CONDY						
GRANTEE: R DALE & NATALIA CO						
1046/2044	5/06/2005	WD	Q	I		281,000
GRANTOR: THOMAS HENDRIX & SMIT						
GRANTEE: R DALE CONDY						

BUILDING NOTES

BUILDING DIMENSIONS

BAS= W17 S35 E7 S6 FOP= S8 E36 N8 W36$ E36 N6 E11 FGR= S5 E24 N25 W24 S20$ N20 E24 N22 W24 S7 FOP= W35 S10 E16 U4 R2 E6 R2 D4 E2 R7 U7 N3$ S3 D7 L7 W2 U4 L2 W8 L2 D4 W16 N10$ PTR= N30 FUS= N12 W23 N4 W4 S16 E27$ S30$.

EXTRA FEATURES

LN	OB/XF CODE	DESCRIPTION	BLD	CAP	L	W	UNITS	UT	Adj R	ADJ UNIT PRICE	ORIG COND	YEAR ON	YEAR ACTUAL	Q	% COND	OB/XF MKT VALUE	NOTES
1	0166	CONC,PAVMT	0	100	12	24	288.00	UT	2.00	2.00	100	1999	1999	3	100	576	
2	0210	GARAGE U	0	100	40	32	1,280.00	UT	18.00	18.00	100	2007	2007	3	100	23,040	

LAND DESCRIPTION

TOTAL OB/XF 23,616

LN	USE CODE	CLS	LAND USE DESCRIPTION	CAP	RD	LOC ZONE	FRONT	DEPTH	TOT LND UTS	UNIT TYPE	DT	DPTH FACT	% COND	TOT ADJ	UNIT PRICE	ADJ UNIT PRICE	LAND VALUE	OTHER ADJUSTMENTS AND NOTES	YEAR	DENSITY	DECL	FRZ	YR	CONSRV
1	0100	C	SFR	100		A-1	0.00	0.00	5.33	AC		1.00	1.00	1.00	11,000.00	11,000.00	58,630							

REVIEW DATE 07/17/2019 BY KR Total Acres: 5.33 Total Land Value: 58,630 Market: 0 Agricultural: 0 Common: 58,630 PRINTED 11/18/2025 BY SYS