LOT 5 BLOCK 2 CLUB VIEW PARK
S/D. 854-568, WD 1357-1548,

PATEL JANAK/ATEL BHAVNABAHEN
726 NW CLUBVIEW CIR
LAKE CITY, FL 32055

2026

27-3S-16-02346-020

COLUMBIA COUNTY PROPERTY

BUILDING CHARACTERISTICS

ELEMENT	CD	CONSTRUCTION
Exterior Wall	17	MSNRY STUC 100
Roof Structur	03	GABLE/HIP 100
Roof Cover	14	PREFIN MT 100
Interior Wall	05	DRYWALL 100
Interior Floo	14	CARPET 80
Interior Floo	15	HARDTILE 20
Air Condition	03	CENTRAL 100
Heating Type	04	AIR DUCTED 100
Bedrooms		4 100
Bathrooms		3.5 100
Frame	01	NONE 100
Stories	1.	1. 100
Architectual	05	CONV 100
Units		0 100
Condition Adj	01	01 100
Kitchen Adjus	01	01 100
Quality	06	06
DOR CODE	0100	SINGLE FAMILY
MAP NUM		MKT AREA 06
NEIGHBORHOOD/LOC	27316.080	1.00/

AREA TYPE	TOTAL GROSS AREA	PCT OF BASE	YEAR	TOT ADJ AREA	SUBAREA MARKET VALUE
BAS	290	100		290	19,872
BAS	1,994	100		1,994	136,639
BAS	290	100	2024	290	19,872
FGR	440	55		242	16,583
FOP	79	30		24	1,645
FOP	216	30	2024	65	4,454
FOP	348	30	2024	104	7,126
FUS	712	100	2024	712	48,790
TOTALS	4,369			3,721	254,980

MARKET ADJUSTMENTS

TYPE	MDL	EFF. AREA	TOT ADJ PTS	EFF. BASE RATE	REPL. COST NEW	AYB	EYB	ECON	FNCT		NORM	% COND
0100	01	3,721	95.6004	107.07	398,407	1999	1999	10	0	0	26.00	64.00

1 SINGLE FAM 0% - 0 Heated Area: 3286 HX Base Yr

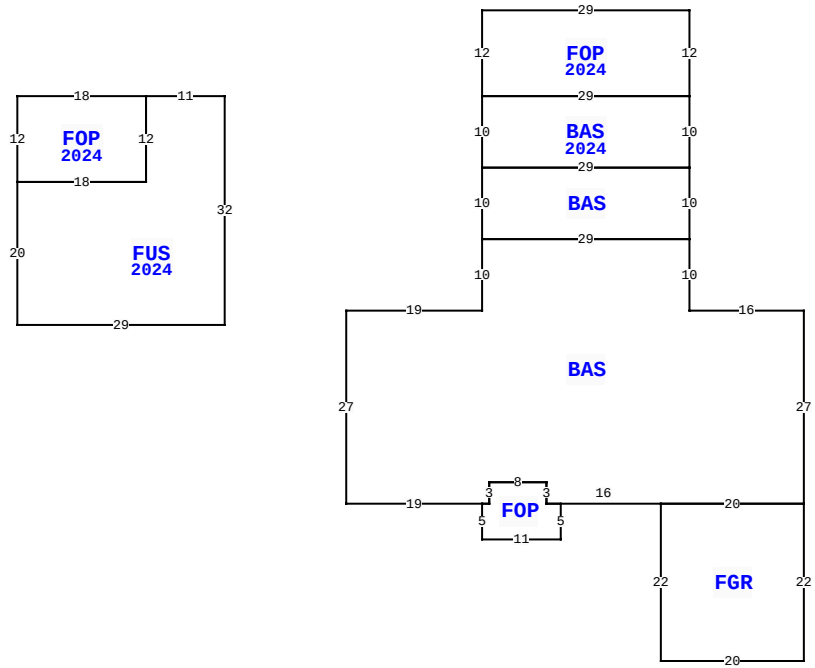

726 NW CLUBVIEW CIR, LAKE CITY

BLD DATE		LGL DATE	
XF DATE		LAND DATE	04/03/2025 MLU
INC DATE		AG DATE	

VALUATION SUMMARY

VALUATION BY	STANDARD
Tax Group: 2	Tax Dist:
BUILDING MARKET VALUE	254,980
TOTAL MARKET OB/XF VALUE	4,061
TOTAL LAND VALUE - MARKET	30,000
TOTAL MARKET VALUE	289,041
SOH/AGL Deduction	0
ASSESSED VALUE	289,041
TOTAL EXEMPTION VALUE	0
BASE TAXABLE VALUE	289,041
TOTAL JUST VALUE	289,041
NCON VALUE	0
INCOME VALUE	
PREVIOUS YEAR MKT VALUE	293,026

PERMIT NUM	DESCRIPTION	AMT	ISSUED
000045928	Roof Replacement	28,000	11/16/2022
000045243	Additions	312,486	08/22/2022
14655	SFR	400	10/22/1998

SALES DATA

OFF RECORD Number	DATE	TYPE INST	Q U /	V I /	RSN CD	SALE PRICE
1357/1548	4/10/2018	WD	U	I	30	135,000
GRANTOR: NILESH R PATEL						
GRANTEE: JANAK & BHAVNABAHEN						
0854/0568	2/25/1998	WD	Q	V		14,000
GRANTOR: FERNANDEZ						
GRANTEE: PATEL						

BUILDING NOTES

BUILDING DIMENSIONS

BAS=[ORIG=0,0] W16 N10 W29 S10 W19 S27 E19 E1 N3 E8 S3 E16 E20 N27 $
FUS=[YR=2024;ORIG=-81,-30] W11 S12 W18 S20 E29 N32 $
FGR=[ORIG=-20,27] S22 E20 N22 W20 $
FOP=[YR=2024;ORIG=-45,-42] E29 S12 W29 N12 $
BAS=[ORIG=-16,-10] N10 W29 S10 E29 $
BAS=[YR=2024;ORIG=-45,-30] E29 S10 W29 N10 $
FOP=[ORIG=-45,27] S5 E11 N5 W2 N3 W8 S3 W1 $
FOP=[YR=2024;ORIG=-110,-30] E18 S12 W18 N12 $
.

EXTRA FEATURES

L N	OB/XF CODE	DESCRIPTION	BLD	CAP	L	W	UNITS	UT	Adj R	ADJ UNIT PRICE	ORIG COND	YEAR ON	YEAR ACTUAL	Q	% COND	OB/XF MKT VALUE	NOTES
1	0166	CONC,PAVMT	0	0	0	0	1,575.00	UT	1.50	1.50	100	1999	1999	3	100	2,363	
2	0169	FENCE/WOOD	0	0	0	0	128.00	UT	3.50	3.50	100	1999	1999	3	100	448	
3	0169	FENCE/WOOD	0	0	0	0	1.00	UT	0.00	0.00	100	1999	1999	3	100	250	
4	0296	SHED METAL	0	0	0	0	1.00	UT	1,000.00	1,000.00	100	2023	2022		100	1,000	

LAND DESCRIPTION

TOTAL OB/XF 4,061

L N	USE CODE	CLS	LAND USE DESCRIPTION	CAP	R D	LOC ZONE	FRONT	DEPTH	TOT LND UTS	UNIT TYPE	D T	DPTH FACT	% COND	TOT ADJ	UNIT PRICE	ADJ UNIT PRICE	LAND VALUE	OTHER ADJUSTMENTS AND NOTES	YEAR	DENSITY	DECL	FRZ	YR	CONSRV
1	0100	C	SFR	0		A-1	0.00	0.00	1.00	LT		1.00	1.00	1.00	30,000.00	30,000.00	30,000							

REVIEW DATE 05/12/2023 BY HC Total Acres: 0.47 Total Land Value: 30,000 Market: 0 Agricultural: 0 Common: 30,000 PRINTED 11/19/2025 BY SYS