LOT 6 BLK A TALL PINE ACRES S/D.
630-045, 712-813, 806-2020, WD 1

MURRAY CHRISTIAN DAVID
154 NW OPEN CT
LAKE CITY, FL 32055

2026

27-3S-16-02318-010

COLUMBIA COUNTY PROPERTY

BUILDING CHARACTERISTICS

ELEMENT	CD	CONSTRUCTION
Exterior Wall	19	COMMON BRK 80
Exterior Wall	31	VINYL SID 20
Roof Structur	03	GABLE/HIP 100
Roof Cover	03	COMP SHNGL 100
Interior Wall	05	DRYWALL 100
Interior Floo	14	CARPET 70
Interior Floo	12	HARDWOOD 30
Air Condition	03	CENTRAL 100
Heating Type	04	AIR DUCTED 100
Bedrooms		3 100
Bathrooms		2 100
Frame	01	NONE 100
Stories	1.	1. 100
Architectual	05	CONV 100
Units		0 100
Condition Adj	03	03 100
Kitchen Adjus	01	01 100
Quality	05	05
DOR CODE	0100	SINGLE FAMILY
MAP NUM		MKT AREA 06
NEIGHBORHOOD/LOC	27316.050	1.00/

AREA TYPE	TOTAL GROSS AREA	PCT OF BASE	YEAR	TOT ADJ AREA	SUBAREA MARKET VALUE
BAS	1,768	100		1,768	143,075
FCP	576	25		144	11,653
FOP	66	30		20	1,619
FST	114	55		63	5,099
UDU	110	55		60	4,856
UDU	176	55		97	7,850
UOP	180	20		36	2,913
TOTALS	2,990			2,188	177,064

MARKET ADJUSTMENTS

TYPE	MDL	EFF. AREA	TOT ADJ PTS	EFF. BASE RATE	REPL. COST NEW	AYB	EYB	ECON	FNCT		NORM	% COND
0100	01	2,188	111.1620	124.50	272,406	1987	1990	0	0	0	35.00	65.00

1 SINGLE FAM 100% - 2020 Heated Area: 1768 HX Base Yr 2020

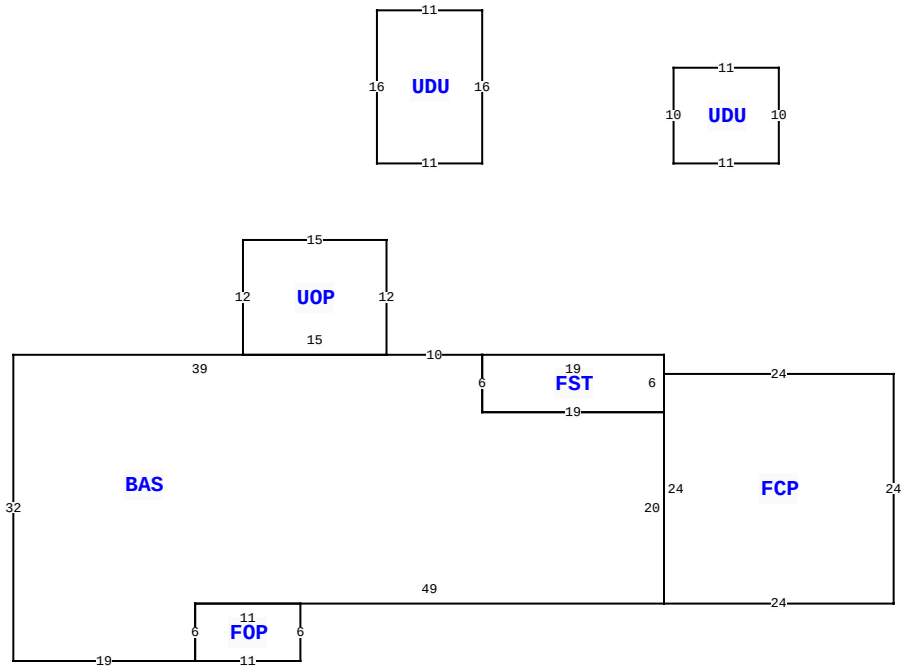

154 NW OPEN CT, LAKE CITY

BLD DATE		LGL DATE	
XF DATE		LAND DATE	04/21/2023 MLU
INC DATE		AG DATE	

VALUATION SUMMARY

VALUATION BY		STANDARD
Tax Group: 2	Tax Dist:	
BUILDING MARKET VALUE		177,064
TOTAL MARKET OB/XF VALUE		9,662
TOTAL LAND VALUE - MARKET		18,500
TOTAL MARKET VALUE		205,226
SOH/AGL Deduction		52,104
ASSESSED VALUE		153,122
TOTAL EXEMPTION VALUE	HX HB	50,722
BASE TAXABLE VALUE		102,400
TOTAL JUST VALUE		205,226
NCON VALUE		0
INCOME VALUE		
PREVIOUS YEAR MKT VALUE		205,226

SALE:2:1: LOT 6, BLK A, TALL PINE ACRES

PERMIT NUM	DESCRIPTION	AMT	ISSUED
000047931	Roof Replacement	15,730	08/21/2023

SALES DATA

OFF RECORD Number	DATE	TYPE INST	Q U	V I	RSN CD	SALE PRICE
1400/1339	11/20/2019	WD	U	I	12	139,900
GRANTOR: US BANK TRUST NA						
GRANTEE: CHRISTIAN DAVID MUR						
1375/2115	11/15/2018	WD	U	I	12	137,400
GRANTOR: GEORGE & MATHIDE OLIV						
GRANTEE: US BANK TRUST NA						

BUILDING NOTES

BUILDING DIMENSIONS

BAS= W10 UOP= N12 W15 S12 E15$ W39 S32 E19 FOP= E11 N6 W11 S6$N6 E49 FCP= E24 N24 W24 S24$ N20 FST= N6 W19 S6 E19$ W19 N6$ PTR= N20 UDU= N16 W11 S16 E11$ S20 PTR= N20 E20 UDU= E11 N10 W11 S10$S20 W20$.

EXTRA FEATURES

LN	OB/XF CODE	DESCRIPTION	BLD	CAP	L	W	UNITS	UT	Adj R	ADJ UNIT PRICE	ORIG COND	YEAR ON	YEAR ACTUAL	Q	% COND	OB/XF MKT VALUE	NOTES
1	0166	CONC,PAVMT	0	100	0	0	2,581.00	UT	2.00	2.00	100	1993	1993	3	100	5,162	
2	0180	FPLC 1STRY	0	100	0	0	1.00	UT	2,000.00	2,000.00	100	0	0	3	100	2,000	
3	0120	CLFENCE 4	0	100	0	0	520.00	UT	2.50	2.50	100	1993	1993	3	100	1,300	
4	0296	SHED METAL	0	100	0	0	1.00	UT	600.00	600.00	100	2023	2022		100	600	
5	0296	SHED METAL	0	100	0	0	1.00	UT	600.00	600.00	100	2023	2022		100	600	

LAND DESCRIPTION

TOTAL OB/XF 9,662

LN	USE CODE	CLS	LAND USE DESCRIPTION	CAP	RD	LOC ZONE	FRONT	DEPTH	TOT LND UTS	UNIT TYPE	DT	DPTH FACT	% COND	TOT ADJ	UNIT PRICE	ADJ UNIT PRICE	LAND VALUE	OTHER ADJUSTMENTS AND NOTES	YEAR	DENSITY	DECL	FRZ	YR	CONSRV
1	0100	C	SFR	100		RSF/MH	146.00	303.00	1.00	LT		1.00	1.00	1.00	18,500.00	18,500.00	18,500							

REVIEW DATE 09/22/2023 BY jerry Total Acres: 1.02 Total Land Value: 18,500 Market: 0 Agricultural: 0 Common: 18,500 PRINTED 11/07/2025 BY SYS