LOT 5 FAIRWAY VIEW UNIT 1-A.
471-384, DC 846-552, QC 1209-112

JACKSON EDMAN E/JACKSON YVONNE
776 NW FAIRWAY DR
LAKE CITY, FL 32055

2026

27-3S-16-02311-005

COLUMBIA COUNTY PROPERTY

BUILDING CHARACTERISTICS

ELEMENT	CD	CONSTRUCTION
Exterior Wall	10	ABOVE AVG. 90
Exterior Wall	21	STONE 10
Roof Structur	03	GABLE/HIP 100
Roof Cover	12	MODULAR MT 100
Interior Wall	05	DRYWALL 100
Interior Floo	14	CARPET 80
Interior Floo	06	VINYL ASB 20
Air Condition	03	CENTRAL 100
Heating Type	04	AIR DUCTED 100
Bedrooms		3 100
Bathrooms		2 100
Frame		N/A 100
Stories	1.	1. 100
Architectual	05	CONV 100
Units		0 100
Condition Adj	03	03 100
Kitchen Adjus	01	01 100
Quality	06	06
DOR CODE	0100	SINGLE FAMILY
MAP NUM		MKT AREA 06
NEIGHBORHOOD/LOC	27316.010	1.00/

AREA TYPE	TOTAL GROSS AREA	PCT OF BASE	YEAR	TOT ADJ AREA	SUBAREA MARKET VALUE
BAS	1,907	100		1,907	159,667
FDU	433	60		260	21,769
FGR	506	55		278	23,276
FOP	42	30		13	1,089
FSP	91	40		36	3,014
UOP	200	20		40	3,349
TOTALS	3,179			2,534	212,163

MARKET ADJUSTMENTS

TYPE	MDL	EFF. AREA	TOT ADJ PTS	EFF. BASE RATE	REPL. COST NEW	AYB	EYB	ECON	FNCT		NORM	% COND
0100	01	2,534	115.0128	128.81	326,405	1982	1982	0	0	0	35.00	65.00

1 SINGLE FAM 0% - 2025 Heated Area: 1907 HX Base Yr

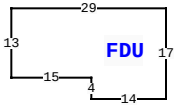

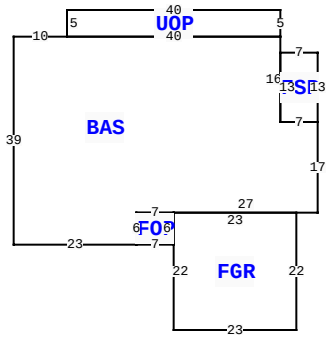

776 NW FAIRWAY DR, LAKE CITY

BLD DATE		LGL DATE	
XF DATE		LAND DATE	04/03/2025 MLU
INC DATE		AG DATE	

VALUATION SUMMARY

VALUATION BY	STANDARD
Tax Group: 2	Tax Dist:
BUILDING MARKET VALUE	212,163
TOTAL MARKET OB/XF VALUE	6,930
TOTAL LAND VALUE - MARKET	35,000
TOTAL MARKET VALUE	254,093
SOH/AGL Deduction	0
ASSESSED VALUE	254,093
TOTAL EXEMPTION VALUE	0
BASE TAXABLE VALUE	254,093
TOTAL JUST VALUE	254,093
NCON VALUE	0
INCOME VALUE	
PREVIOUS YEAR MKT VALUE	254,093

PERMIT NUM	DESCRIPTION	AMT	ISSUED
000053149	Solar Power Syste	20,599	05/19/2025

SALES DATA

OFF RECORD Number	DATE	TYPE INST	Q U	V I	RSN CD	SALE PRICE
1526/2595	9/19/2024	WD	U	I	37	206,300
GRANTOR: PELT JOAN						
GRANTEE: JACKSON EDMAN E						
1344/1849	9/20/2017	WD	Q	I	01	144,000
GRANTOR: LUCILLE J BENZ						
GRANTEE: JOAN PELT						

BUILDING NOTES

BUILDING DIMENSIONS

BAS= W10 S39 E23 FOP= E7 N6 W7 S6$ N6 E7 FGR= S22 E23 N22W23$ E27 N17 FSP= N13 W7 S13 E7$ W7 N16 UOP= N5 W40 S5 E40$ W40$ PTR= N50 FDU= N17 W29S13 E15 S4 E14$ S50$.

EXTRA FEATURES

LN	OB/XF CODE	DESCRIPTION	BLD	CAP	L	W	UNITS	UT	Adj R	ADJ UNIT PRICE	ORIG COND	YEAR ON	YEAR ACTUAL	Q	% COND	OB/XF MKT VALUE	NOTES
1	0120	CLFENCE 4	0	0	0	0	280.00	UT	4.50	4.50	100	1993	1993	3	100	1,260	
2	0166	CONC,PAVMT	0	0	0	0	1,335.00	UT	2.00	2.00	100	1993	1993	3	100	2,670	
3	0180	FPLC 1STRY	0	0	0	0	1.00	UT	2,000.00	2,000.00	100	2009	2009	3	100	2,000	
4	0296	SHED METAL	0	0	0	0	1.00	UT	1,000.00	1,000.00	100	2023	2022		100	1,000	

LAND DESCRIPTION

TOTAL OB/XF 6,930

LN	USE CODE	CLS	LAND USE DESCRIPTION	CAP	RD	LOC ZONE	FRONT	DEPTH	TOT LND UTS	UNIT TYPE	DT	DPTH FACT	% COND	TOT ADJ	UNIT PRICE	ADJ UNIT PRICE	LAND VALUE	OTHER ADJUSTMENTS AND NOTES	YEAR	DENSITY	DECL	FRZ	YR	CONSRV
1	0100	C	SFR	0			0.00	0.00	1.00	LT		1.00	1.00	1.00	35,000.00	35,000.00	35,000							

REVIEW DATE 02/10/2025 BY TP Total Acres: 0.50 Total Land Value: 35,000 Market: 0 Agricultural: 0 Common: 35,000 PRINTED 11/18/2025 BY SYS