LOT 1 FAIRWAY VIEW UNIT 1A.

ORB 412-735, 662-90, 670-332

WALTER DAVA LYNN
891 NW FAIRWAY DR
LAKE CITY, FL 32055

2026

27-3S-16-02311-001

COLUMBIA COUNTY PROPERTY

BUILDING CHARACTERISTICS

ELEMENT	CD	CONSTRUCTION
Exterior Wall	19	COMMON BRK 100
Roof Structur	03	GABLE/HIP 100
Roof Cover	03	COMP SHNGL 100
Interior Wall	05	DRYWALL 100
Interior Floo	14	CARPET 80
Interior Floo	15	HARDTILE 20
Air Condition	03	CENTRAL 100
Heating Type	04	AIR DUCTED 100
Bedrooms		3 100
Bathrooms		3 100
Frame	01	NONE 100
Stories	1.	1. 100
Architectual	05	CONV 100
Units		0 100
Condition Adj	03	03 100
Kitchen Adjus	01	01 100
Quality	07	07
DOR CODE	0100	SINGLE FAMILY
MAP NUM		MKT AREA 06
NEIGHBORHOOD/LOC	27316.010	1.00/

AREA TYPE	TOTAL GROSS AREA	PCT OF BASE	YEAR	TOT ADJ AREA	SUBAREA MARKET VALUE
APT	108	100	2025	108	9,432
APT	432	100	2025	432	37,729
BAS	2,896	100		2,896	252,920
FDG	108	60	2025	65	5,676
FDG	432	60	2025	259	22,619
FEP	294	80		235	20,524
FGR	308	55		169	14,760
FOP	30	30		9	786
FOP	208	30		62	5,415
TOTALS	4,816			4,235	369,860

MARKET ADJUSTMENTS

TYPE	MDL	EFF. AREA	TOT ADJ PTS	EFF. BASE RATE	REPL. COST NEW	AYB	EYB	ECON	FNCT		NORM	% COND
0100	01	4,235	119.9660	134.36	569,015	1981	1981	0	0	0	35.00	65.00

1 SINGLE FAM 100% - 2020 Heated Area: 3436 HX Base Yr 2020

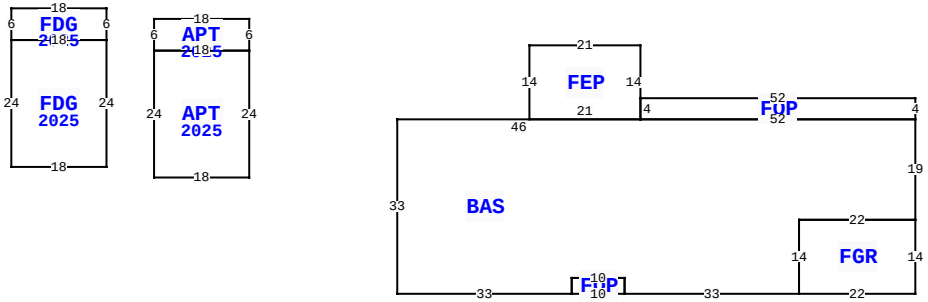

891 NW FAIRWAY DR, LAKE CITY

BLD DATE		LGL DATE	
XF DATE		LAND DATE	04/03/2025 MLU
INC DATE		AG DATE	

VALUATION SUMMARY

VALUATION BY		STANDARD
Tax Group: 2	Tax Dist:	
BUILDING MARKET VALUE		369,860
TOTAL MARKET OB/XF VALUE		5,050
TOTAL LAND VALUE - MARKET		42,000
TOTAL MARKET VALUE		416,910
SOH/AGL Deduction		104,583
ASSESSED VALUE		312,327
TOTAL EXEMPTION VALUE	HX HB WX	55,722
BASE TAXABLE VALUE		256,605
TOTAL JUST VALUE		416,910
NCON VALUE		0
INCOME VALUE		
PREVIOUS YEAR MKT VALUE		416,910

PERMIT NUM	DESCRIPTION	AMT	ISSUED
000048295	New Residential C	119,150	09/29/2023
30975	MAINT/ALTR	65	04/25/2013

SALES DATA

OFF RECORD Number	DATE	TYPE INST	Q U	V I	RSN CD	SALE PRICE
1389/0864	7/18/2019	WD	Q	I	01	229,000
GRANTOR: EDDIE & DONNA ANDERSO						
GRANTEE: DAVA LYNN WALTER						
0921/0437	2/22/2001	WD	Q	I		150,000
GRANTOR: NANCY WHEATON						
GRANTEE: EDDIE & DONNA ANDER						

EXTRA FEATURES

LN	OB/XF CODE	DESCRIPTION	BLD	CAP	L	W	UNITS	UT	Adj R	ADJ UNIT PRICE	ORIG COND	YEAR ON	YEAR ACTUAL	Q	% COND	OB/XF MKT VALUE	NOTES
1	0166	CONC,PAVMT	0	100	0	0	1.00	UT	0.00	0.00	100	1981	1981	3	100	1,500	
2	0190	FPLC PF	0	100	0	0	1.00	UT	1,200.00	1,200.00	100	0	0	3	100	1,200	
3	0060	CARPORT F	0	100	13	20	260.00	UT	5.00	5.00	100	1993	1993	3	100	1,300	
4	0294	SHED WOOD/	0	100	14	10	140.00	UT	7.50	7.50	100	1993	1993	3	100	1,050	

BUILDING NOTES

BUILDING DIMENSIONS

BAS=[ORIG=0,0] W52 W46 S33 E33 N3 E10 S3 E33 N14 E22 N19 $
FDG=[YR=2025;ORIG=-171,-15] E18 S24 W18 N24 $
APT=[YR=2025;ORIG=-144,-13] E18 S24 W18 N24 $
FGR=[ORIG=-22,33] E22 N14 W22 S14 $
FEP=[ORIG=-52,0] N14 W21 S14 E21 $
FOP=[ORIG=0,0] N4 W52 S4 E52 $
FDG=[YR=2025;ORIG=-171,-21] E18 S6 W18 N6 $
APT=[YR=2025;ORIG=-144,-19] E18 S6 W18 N6 $
FOP=[ORIG=-65,33] E10 N3 W10 S3 $
.

LAND DESCRIPTION

TOTAL OB/XF 5,050

LN	USE CODE	CLS	LAND USE DESCRIPTION	CAP	RD	LOC ZONE	FRONT	DEPTH	TOT LND UTS	UNIT TYPE	DT	DPTH FACT	% COND	TOT ADJ	UNIT PRICE	ADJ UNIT PRICE	LAND VALUE	OTHER ADJUSTMENTS AND NOTES	YEAR	DENSITY	DECL	FRZ	YR	CONSRV
1	0140	C	SFR GOLF	100		00	0.00	0.00	1.00	LT		1.00	1.00	1.20	35,000.00	42,000.00	42,000							

REVIEW DATE 12/05/2024 BY TW Total Acres: 0.51 Total Land Value: 42,000 Market: 0 Agricultural: 0 Common: 42,000 PRINTED 11/18/2025 BY SYS