LOT 15 FAIRWAY VIEW UNIT 3.
625-002, 757-2047, 867-2197

MATTHEWS DUDLEY G/MATTHEWS GAIL L
356 NW MALLARD PL
LAKE CITY, FL 32055-8645

2025

27-3S-16-02310-007

COLUMBIA COUNTY PROPERTY

BUILDING CHARACTERISTICS

ELEMENT	CD	CONSTRUCTION
Exterior Wall	12	CEDAR 100
Roof Structur	03	GABLE/HIP 100
Roof Cover	03	COMP SHNGL 100
Interior Wall	05	DRYWALL 100
Interior Floo	14	CARPET 50
Interior Floo	15	HARDTILE 50
Air Condition	03	CENTRAL 100
Heating Type	04	AIR DUCTED 100
Bedrooms		3 100
Bathrooms		2 100
Frame	01	NONE 100
Stories	1.	1. 100
Architectual	05	CONV 100
Units		0 100
Condition Adj	03	03 100
Kitchen Adjus	01	01 100
Quality	07	07
DOR CODE	0100	SINGLE FAMILY
MAP NUM		MKT AREA 06
NEIGHBORHOOD/LOC	27316.010	1.00/

AREA TYPE	TOTAL GROSS AREA	PCT OF BASE	YEAR	TOT ADJ AREA	SUBAREA MARKET VALUE
BAS	1,650	100		1,650	152,392
FGR	462	55		254	23,459
FOP	21	30		6	554
FSP	40	40		16	1,477
FSP	405	40		162	14,962
TOTALS	2,578			2,088	192,845

MARKET ADJUSTMENTS

TYPE	MDL	EFF. AREA	TOT ADJ PTS	EFF. BASE RATE	REPL. COST NEW	AYB	EYB	ECON	FNCT		NORM	% COND
0100	01	2,088	126.8685	142.09	296,684	1983	1983	0	0	0	35.00	65.00

1 SINGLE FAM – 100% - 1999 Heated Area: 1650 HX Base Yr 1999

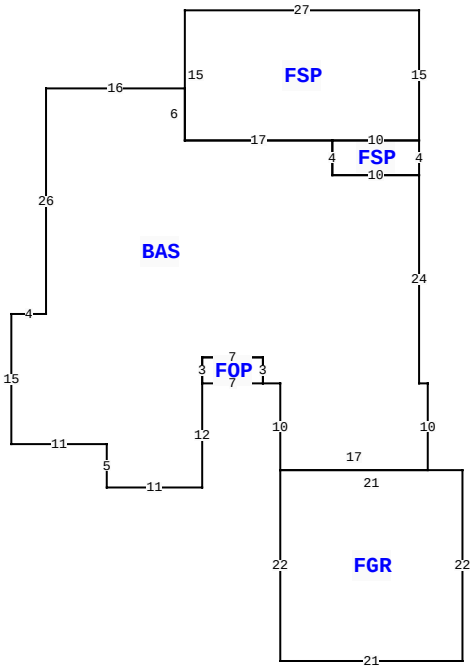

356 NW MALLARD PL, LAKE CITY

BLD DATE		LGL DATE	
XF DATE		LAND DATE	04/03/2025 MLU
INC DATE		AG DATE	

VALUATION SUMMARY

VALUATION BY		STANDARD
Tax Group: 2	Tax Dist:	
BUILDING MARKET VALUE		192,845
TOTAL MARKET OB/XF VALUE		1,950
TOTAL LAND VALUE - MARKET		42,000
TOTAL MARKET VALUE		236,795
SOH/AGL Deduction		95,284
ASSESSED VALUE		141,511
TOTAL EXEMPTION VALUE	HX HB	50,722
BASE TAXABLE VALUE		90,789
TOTAL JUST VALUE		236,795
NCON VALUE		0
INCOME VALUE		
PREVIOUS YEAR MKT VALUE		218,742

PERMIT NUM	DESCRIPTION	AMT	ISSUED
000042204	Remodel	11,136	06/23/2021
30860	ADDN SFR	179	03/22/2013

SALES DATA

OFF RECORD Number	DATE	TYPE INST	Q U	V I	RSN CD	SALE PRICE
0867/2197	10/21/1998	WD	Q	I		98,000
GRANTOR: JONES CARLTON A & GEO						
GRANTEE: MATHEWS						
0757/2047	3/17/1992	WD	Q	I		85,000
GRANTOR: JERRY SUE THOMSEN						
GRANTEE: CARLTON JONES						

BUILDING NOTES

BUILDING DIMENSIONS

BAS= W16 S26 W4 S15 E11 S5 E11 N12 FOP= E7 N3 W7 S3$ N3E7 S3E2 S10 FGR= S22 E21 N22 W21$ E17 N10 W1 N24 FSP= N4 W10 S4 E10$ W10 N4 FSP= E10 N15 W27 S15 E17$ W17 N6$.

EXTRA FEATURES

LN	OB/XF CODE	DESCRIPTION	BLD	CAP	L	W	UNITS	UT	Adj R	ADJ UNIT PRICE	ORIG COND	YEAR ON	YEAR ACTUAL	Q	% COND	OB/XF MKT VALUE	NOTES
1	0166	CONC,PAVMT	0	100	0	0	1.00	UT	0.00	0.00	100	0	0	3	100	450	
2	0294	SHED WOOD/	0	100	0	0	1.00	UT	0.00	0.00	100	2014	2014	3	100	1,500	

LAND DESCRIPTION

TOTAL OB/XF 1,950

LN	USE CODE	CLS	LAND USE DESCRIPTION	CAP	RD	LOC ZONE	FRONT	DEPTH	TOT LND UTS	UNIT TYPE	DT	DPTH FACT	% COND	TOT ADJ	UNIT PRICE	ADJ UNIT PRICE	LAND VALUE	OTHER ADJUSTMENTS AND NOTES	YEAR	DENSITY	DECL	FRZ	YR	CONSRV
1	0140	C	SFR GOLF	100		RSF-2	62.00	152.00	1.00	LT		1.00	1.00	1.20	35,000.00	42,000.00	42,000							

REVIEW DATE 05/25/2023 BY JB Total Acres: 0.22 Total Land Value: 42,000 Market: 0 Agricultural: 0 Common: 42,000 PRINTED 05/16/2025 BY SYS