LOT 1 SUWANNEE ACRES S/D.
640-295, 837-173, LE 1424-48, WD

PINKSTON MILDRED
138 NW TOWERVIEW GLN
LAKE CITY, FL 32055

2026

27-2S-16-01760-001

COLUMBIA COUNTY PROPERTY

BUILDING CHARACTERISTICS

ELEMENT	CD	CONSTRUCTION
Exterior Wall	19	COMMON BRK 80
Exterior Wall	31	VINYL SID 20
Roof Structur	03	GABLE/HIP 100
Roof Cover	03	COMP SHNGL 100
Interior Wall	05	DRYWALL 100
Interior Floo	14	CARPET 100
Air Condition	03	CENTRAL 100
Heating Type	04	AIR DUCTED 100
Bedrooms		4 100
Bathrooms		3 100
Frame	01	NONE 100
Stories	1.	1. 100
Architectual	05	CONV 100
Units		0 100
Condition Adj	03	03 100
Kitchen Adjus	01	01 100
Quality	05	05
DOR CODE	0100	SINGLE FAMILY
MAP NUM		MKT AREA 03
NEIGHBORHOOD/LOC	27216.010	1.00/

AREA TYPE	TOTAL GROSS AREA	PCT OF BASE	YEAR	TOT ADJ AREA	SUBAREA MARKET VALUE
BAS	2,014	100		2,014	164,122
FGR	462	55		254	20,699
FOP	27	30		8	652
TOTALS	2,503			2,276	185,472

MARKET ADJUSTMENTS

TYPE	MDL	EFF. AREA	TOT ADJ PTS	EFF. BASE RATE	REPL. COST NEW	AYB	EYB	ECON	FNCT		NORM	% COND
0100	01	2,276	111.9380	125.37	285,342	1978	1978	0	0	0	35.00	65.00

1 SINGLE FAM 100% - 0 Heated Area: 2014 HX Base Yr

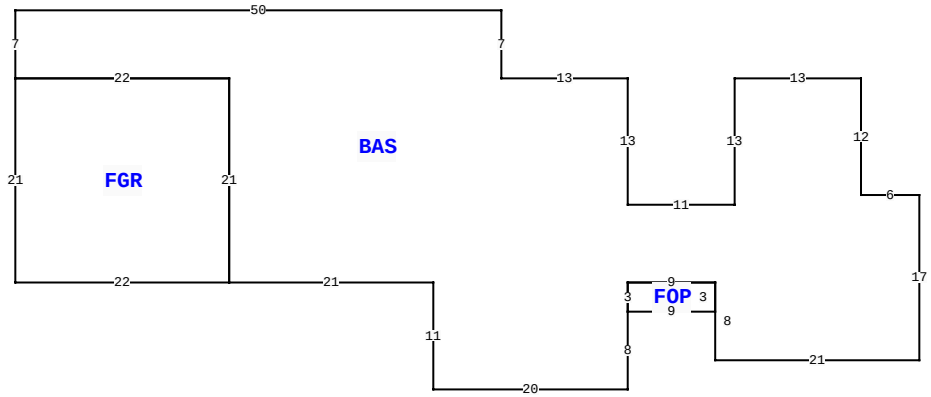

138 NW TOWERVIEW GLN, LAKE CITY

BLD DATE		LGL DATE	
XF DATE		LAND DATE	04/22/2025 MLU
INC DATE		AG DATE	

VALUATION SUMMARY

VALUATION BY		STANDARD
Tax Group: 3	Tax Dist:	
BUILDING MARKET VALUE		185,472
TOTAL MARKET OB/XF VALUE		3,200
TOTAL LAND VALUE - MARKET		10,500
TOTAL MARKET VALUE		199,172
SOH/AGL Deduction		87,899
ASSESSED VALUE		111,273
TOTAL EXEMPTION VALUE	HX HB WX	55,722
BASE TAXABLE VALUE		55,551
TOTAL JUST VALUE		199,172
NCON VALUE		0
INCOME VALUE		
PREVIOUS YEAR MKT VALUE		199,172

PERMIT NUM	DESCRIPTION	AMT	ISSUED

SALES DATA

OFF RECORD Number	DATE	TYPE INST	Q / U	V / I	RSN CD	SALE PRICE
1475/21	8/13/2022	LE	U	I	14	100
GRANTOR: PINKSTON MILDRED V						
GRANTEE: JOHNSON JUNE						
1475/19	8/13/2022	WD	U	I	11	100
GRANTOR: PINKSTON MILDRED AS T						
GRANTEE: PINKSON MILDRED						

BUILDING NOTES

BUILDING DIMENSIONS

BAS=[ORIG=0,0] W6 N12 W13 S13 W11 N13 W13 N7 W50 S7 E22 S21
E21 S11 E20 N8 N3 E9 S8 E21 N17 $
FGR=[ORIG=-93,-12] S21 E22 N21 W22 $
FOP=[ORIG=-30,12] E9 N3 W9 S3 $
.

EXTRA FEATURES

LN	OB/XF CODE	DESCRIPTION	BLD	CAP	L	W	UNITS	UT	Adj R	ADJ UNIT PRICE	ORIG COND	YEAR ON	YEAR ACTUAL	Q	% COND	OB/XF MKT VALUE	NOTES
1	0180	FPLC 1STRY	0	100	0	0	1.00	UT	2,000.00	2,000.00	100	0	0	3	100	2,000	
2	0166	CONC,PAVMT	0	100	20	5	100.00	UT	1.40	1.40	100	0	0	3	100	140	
3	0258	PATIO	0	100	0	0	1.00	UT	0.00	0.00	100	2008	2008	3	100	100	
4	0166	CONC,PAVMT	0	100	16	60	960.00	UT	1.00	1.00	100	1993	1993	3	100	960	

LAND DESCRIPTION

TOTAL OB/XF 3,200

LN	USE CODE	CLS	LAND USE DESCRIPTION	CAP	RD	LOC ZONE	FRONT	DEPTH	TOT LND UTS	UNIT TYPE	DT	DPTH FACT	% COND	TOT ADJ	UNIT PRICE	ADJ UNIT PRICE	LAND VALUE	OTHER ADJUSTMENTS AND NOTES	YEAR	DENSITY	DECL	FRZ	YR	CONSRV
1	0100	C	SFR	100		00	223.00	148.00	1.00	LT		1.00	1.00	1.00	10,500.00	10,500.00	10,500							

REVIEW DATE 04/13/2023 BY kellen Total Acres: 0.76 Total Land Value: 10,500 Market: 0 Agricultural: 0 Common: 10,500 PRINTED 10/07/2025 BY SYS