COMM SW COR OF SE1/4 OF SE1/4, R
FOR POB, RUN N 630.98 FT, NE ALO
FT, E 295.34 FT, S 635.04 FT, W

RUARK JOHN D/RUARK SARAH H
232 SW DANA GLN
FORT WHITE, FL 32038

**2026**

**26-7S-16-04335-004**

## BUILDING CHARACTERISTICS

| ELEMENT | CD | CONSTRUCTION |
|---|---|---|
| Exterior Wall | 32 | HARDIE BRD 100 |
| Exterior Wall | 00 | N/A 0 |
| Roof Structur | 03 | GABLE/HIP 100 |
| Roof Cover | 12 | MODULAR MT 100 |
| Interior Wall | 05 | DRYWALL 100 |
| Interior Floo | 15 | HARDTILE 100 |
| Interior Floo | 00 | N/A 0 |
| Air Condition | 03 | CENTRAL 100 |
| Heating Type | 04 | AIR DUCTED 100 |
| Bedrooms | | 3 100 |
| Bathrooms | | 2 100 |
| Frame | 02 | WOOD FRAME 100 |
| Stories | 1. | 1. 100 |
| Units | | 0 100 |
| Condition Adj | 03 | 03 100 |
| Kitchen Adjus | 01 | 01 100 |
| Quality | 05 | 05 |
| DOR CODE | 0200 | MOBILE HOME |
| MAP NUM | | MKT AREA 02 |
| NEIGHBORHOOD/LOC | 26716.030 | 1.00/ |

| AREA TYPE | TOTAL GROSS AREA | PCT OF BASE | YEAR | TOT ADJ AREA | SUBAREA MARKET VALUE |
|---|---|---|---|---|---|
| BAS | 1,628 | 100 | 2023 | 1,628 | 212,729 |
| FDC | 624 | 35 | 2023 | 218 | 28,486 |
| FOP | 30 | 30 | 2023 | 9 | 1,176 |
| FOP | 352 | 30 | 2023 | 106 | 13,851 |
| FST | 144 | 55 | 2023 | 79 | 10,323 |
| TOTALS | 2,778 | | | 2,040 | 266,564 |

## MARKET ADJUSTMENTS

| TYPE | MDL | EFF. AREA | TOT ADJ PTS | EFF. BASE RATE | REPL. COST NEW | AYB | EYB | ECON | FNCT | | NORM | % COND |
|---|---|---|---|---|---|---|---|---|---|---|---|---|
| 0100 | 01 | 2,040 | 120.2800 | 134.71 | 274,808 | 2022 | 2022 | 0 | 0 | 0 | 3.00 | 97.00 |

2 SINGLE FAM 100% - 2023 Heated Area: 1628 HX Base Yr 2022

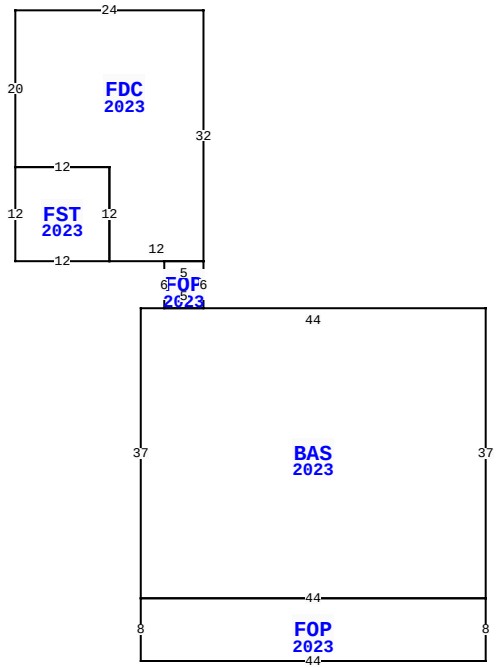


232 SW DANA GLN, FORT WHITE

| | | | |
|---|---|---|---|
| BLD DATE | | LGL DATE | |
| XF DATE | | LAND DATE | 05/14/2024 MLU |
| INC DATE | | AG DATE | |

## COLUMBIA COUNTY PROPERTY

PAGE 1 of 1 3

### VALUATION SUMMARY

| | | |
|---|---|---|
| VALUATION BY | | STANDARD |
| Tax Group: 3 | Tax Dist: | |
| BUILDING MARKET VALUE | | 266,564 |
| TOTAL MARKET OB/XF VALUE | | 9,010 |
| TOTAL LAND VALUE - MARKET | | 50,000 |
| TOTAL MARKET VALUE | | 325,574 |
| SOH/AGL Deduction | | 155,093 |
| ASSESSED VALUE | | 170,481 |
| TOTAL EXEMPTION VALUE | HX HB | 50,722 |
| BASE TAXABLE VALUE | | 119,759 |
| TOTAL JUST VALUE | | 325,574 |
| NCON VALUE | | 0 |
| INCOME VALUE | | |
| PREVIOUS YEAR MKT VALUE | | 328,322 |

| PERMIT NUM | DESCRIPTION | AMT | ISSUED |
|---|---|---|---|
| 000042408 | New Residential C | 240,000 | 07/27/2021 |
| 28592 | M H | 491 | 05/21/2010 |

## SALES DATA

| OFF RECORD Number | DATE | TYPE INST | Q U | V I | RSN CD | SALE PRICE |
|---|---|---|---|---|---|---|
| 1102/1276 | 10/31/2006 | WD | Q | V | | 70,000 |
| GRANTOR: ALLEN EMRICH & BONNIE | | | | | | |
| GRANTEE: JOHN D & SARAH H RU | | | | | | |
| 1046/1515 | 5/20/2005 | WD | U | V | 08 | 30,000 |
| GRANTOR: TAMMY BOWEN | | | | | | |
| GRANTEE: ALLEN EMRICH & BONN | | | | | | |

## BUILDING NOTES

## BUILDING DIMENSIONS

BAS=[YR=2023;ORIG=24,12] E44 S37 W44 N37 $
FDC=[YR=2023;ORIG=32,-26] W24 S20 E12 S12 E12 N32 $
FST=[YR=2023;ORIG=8,-6] E12 S12 W12 N12 $
FOP=[YR=2023;ORIG=27,6] E5 S6 W5 N6 $
FOP=[YR=2023;ORIG=24,49] E44 S8 W44 N8 $
.

## EXTRA FEATURES

| LN | OB/XF CODE | DESCRIPTION | BLD | CAP | L | W | UNITS | UT | Adj R | ADJ UNIT PRICE | ORIG COND | YEAR ON | YEAR ACTUAL | Q | % COND | OB/XF MKT VALUE | NOTES |
|---|---|---|---|---|---|---|---|---|---|---|---|---|---|---|---|---|---|
| 1 | 0070 | CARPORT UF | 0 | 100 | 18 | 30 | 540.00 | UT | 1.50 | 1.50 | 100 | 2010 | 2010 | 3 | 100 | 810 | |
| 2 | 0296 | SHED METAL | 0 | 100 | 10 | 12 | 120.00 | UT | 10.00 | 10.00 | 100 | 2010 | 2010 | 3 | 100 | 1,200 | |
| 3 | 9945 | Well/Sept | 0 | 100 | 0 | 0 | 1.00 | UT | 7,000.00 | 7,000.00 | 100 | | | 3 | 100 | 7,000 | |

## LAND DESCRIPTION

TOTAL OB/XF 9,010

| LN | USE CODE | CLS | LAND USE DESCRIPTION | CAP | RD | LOC ZONE | FRONT | DEPTH | TOT LND UTS | UNIT TYPE | DT | DPTH FACT | % COND | TOT ADJ | UNIT PRICE | ADJ UNIT PRICE | LAND VALUE | OTHER ADJUSTMENTS AND NOTES | YEAR | DENSITY | DECL | FRZ | YR | CONSRV |
|---|---|---|---|---|---|---|---|---|---|---|---|---|---|---|---|---|---|---|---|---|---|---|---|---|
| 1 | 0200 | C | MBL HM | 100 | | A-1 | 0.00 | 0.00 | 5.00 | AC | | 1.00 | 1.00 | 1.00 | 10,000.00 | 10,000.00 | 50,000 | | | | | | | |

REVIEW DATE 12/28/2022 BY HC Total Acres: 5.00 Total Land Value: 50,000 Market: 0 Agricultural: 0 Common: 50,000 PRINTED 11/18/2025 BY SYS