AKA LOT 16 ICHETUCKNEE RIDGE UNR
OF SW1/4 OF NE1/4, RUN E 390.05
FOR POB, CONT S 1320 FT, E 330.0

MADNICK JASON D/MADNICK DEBORAH I
478 SW WEATHERBY PL
LAKE CITY, FL 32024

2026

26-5S-15-00483-116

COLUMBIA COUNTY PROPERTY

BUILDING CHARACTERISTICS

ELEMENT	CD	CONSTRUCTION
Exterior Wall	32	HARDIE BRD 100
Roof Structur	08	IRREGULAR 100
Roof Cover	03	COMP SHNGL 100
Interior Wall	05	DRYWALL 100
Interior Floo	14	CARPET 80
Interior Floo	15	HARDTILE 20
Air Condition	03	CENTRAL 100
Heating Type	04	AIR DUCTED 100
Bedrooms		3 100
Bathrooms		2.5 100
Frame	02	WOOD FRAME 100
Stories	1.	1. 100
Architectual	05	CONV 100
Units		0 100
Condition Adj	03	03 100
Kitchen Adjus	01	01 100
Quality	06	06

DOR CODE 0100 SINGLE FAMILY
MAP NUM | MKT AREA 02
NEIGHBORHOOD/LOC 26515.010 1.00/

AREA TYPE	TOTAL GROSS AREA	PCT OF BASE	YEAR	TOT ADJ AREA	SUBAREA MARKET VALUE
BAS	1,104	100		1,104	114,608
FGR	484	55		266	27,614
FOP	320	30		96	9,966
FUS	878	100		878	91,146
PTO	220	5		11	1,142
TOTALS	3,006			2,355	244,476

MARKET ADJUSTMENTS

TYPE	MDL	EFF. AREA	TOT ADJ PTS	EFF. BASE RATE	REPL. COST NEW	AYB	EYB	ECON	FNCT		NORM	% COND
0100	01	2,355	120.3741	134.82	317,501	2002	2002	0	0	0	23.00	77.00

1 SINGLE FAM 100% - 2020 Heated Area: 1982 HX Base Yr 2020

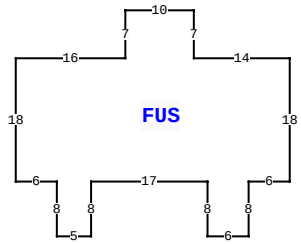

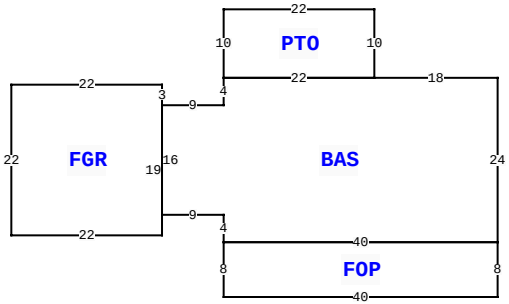

478 SW WEATHERBY PL, LAKE CITY

BLD DATE		LGL DATE	
XF DATE		LAND DATE	04/07/2025 MLU
INC DATE		AG DATE	

VALUATION SUMMARY

VALUATION BY		STANDARD
Tax Group: 3	Tax Dist:	
BUILDING MARKET VALUE		244,476
TOTAL MARKET OB/XF VALUE		8,108
TOTAL LAND VALUE - MARKET		95,095
TOTAL MARKET VALUE		347,679
SOH/AGL Deduction		183,103
ASSESSED VALUE		164,576
TOTAL EXEMPTION VALUE	HX HB	50,722
BASE TAXABLE VALUE		113,854
TOTAL JUST VALUE		347,679
NCON VALUE		0
INCOME VALUE		
PREVIOUS YEAR MKT VALUE		351,154

LAND:1:1: 10.01 AC

PERMIT NUM	DESCRIPTION	AMT	ISSUED
000050228	Electrical Servic	0	06/27/2024
000042134	Roof Replacement	17,000	06/14/2021
18821	SFR	320	10/11/2001

SALES DATA

OFF RECORD Number	DATE	TYPE INST	Q / U	V / I	RSN CD	SALE PRICE

BUILDING NOTES

BUILDING DIMENSIONS

BAS=[ORIG=0,0] W18 W22 S4 W9 S16 E9 S4 E40 N24 $
FUS=[ORIG=0,-30] N8 E6 N18 W14 N7 W10 S7 W16 S18 E6 S8 E5 N8 E17 S8 E6 $
FGR=[ORIG=-49,4] N3 W22 S22 E22 N19 $
FOP=[ORIG=-40,24] S8 E40 N8 W40 $
PTO=[ORIG=-18,0] N10 W22 S10 E22 $
.

EXTRA FEATURES

LN	OB/XF CODE	DESCRIPTION	BLD	CAP	L	W	UNITS	UT	Adj R	ADJ UNIT PRICE	ORIG COND	YEAR ON	YEAR ACTUAL	Q	% COND	OB/XF MKT VALUE	NOTES
1	0296	SHED METAL	0	100	0	0	1.00	UT	600.00	600.00	40	2001	2001	3	40	240	
2	0190	FPLC PF	0	100	0	0	1.00	UT	1,200.00	1,200.00	100	2002	2002	3	100	1,200	
3	0166	CONC,PAVMT	0	100	0	0	584.00	UT	2.00	2.00	100	2002	2002	3	100	1,168	
4	0040	BARN,POLE	0	100	0	0	1.00	UT	0.00	0.00	100	2013	2013	3	100	100	
5	0104	GENERATOR	0	100	0	0	1.00	UT	6,000.00	6,000.00	100	2025	2024		90	5,400	

LAND DESCRIPTION

TOTAL OB/XF 8,108

LN	USE CODE	CLS	LAND USE DESCRIPTION	CAP	RD	LOC ZONE	FRONT	DEPTH	TOT LND UTS	UNIT TYPE	DT	DPTH FACT	% COND	TOT ADJ	UNIT PRICE	ADJ UNIT PRICE	LAND VALUE	OTHER ADJUSTMENTS AND NOTES	YEAR	DENSITY	DECL	FRZ	YR	CONSRV
1	0100	C	SFR	100		A-1	0.00	0.00	10.01	AC		1.00	1.00	1.00	9,500.00	9,500.00	95,095							

REVIEW DATE 08/21/2024 BY TW Total Acres: 10.01 Total Land Value: 95,095 Market: 0 Agricultural: 0 Common: 95,095 PRINTED 11/19/2025 BY SYS