LOT 22 FAIRWAY VIEW UNIT 2-A
852-672, WD 998-2286, DC 1101-480, WD 1406-1980,

TAYLOR REGINALD DENNIS
384 NW HARRIS LOOP
LAKE CITY, FL 32055

2026

26-3S-16-02308-062

COLUMBIA COUNTY PROPERTY

BUILDING CHARACTERISTICS

ELEMENT	CD	CONSTRUCTION
Exterior Wall	19	COMMON BRK 100
Roof Structur	03	GABLE/HIP 100
Roof Cover	03	COMP SHNGL 100
Interior Wall	05	DRYWALL 100
Interior Floo	12	HARDWOOD 60
Interior Floo	15	HARDTILE 40
Air Condition	03	CENTRAL 100
Heating Type	04	AIR DUCTED 100
Bedrooms		3 100
Bathrooms		2.5 100
Frame		N/A 100
Stories	1.5	1.5 100
Architectual	05	CONV 100
Units		0 100
Condition Adj	02	02 100
Kitchen Adjus	01	01 100
Quality	06	06
DOR CODE	0100	SINGLE FAMILY
MAP NUM		MKT AREA 06
NEIGHBORHOOD/LOC	26316.030	1.00/

AREA TYPE	TOTAL GROSS AREA	PCT OF BASE	YEAR	TOT ADJ AREA	SUBAREA MARKET VALUE
BAS	2,803	100		2,803	246,014
FGR	525	55		289	25,365
FHS	180	60		108	9,479
FOP	50	30		15	1,317
FST	100	55		55	4,827
UOP	420	20		84	7,373
TOTALS	4,078			3,354	294,374

MARKET ADJUSTMENTS

TYPE	MDL	EFF. AREA	TOT ADJ PTS	EFF. BASE RATE	REPL. COST NEW	AYB	EYB	ECON	FNCT	AP	NORM	% COND
0100	01	3,354	113.5729	127.20	426,629	1999	1999	0	0	5	26.00	69.00

1 SINGLE FAM 100% - 2021 Heated Area: 2983 HX Base Yr 2021

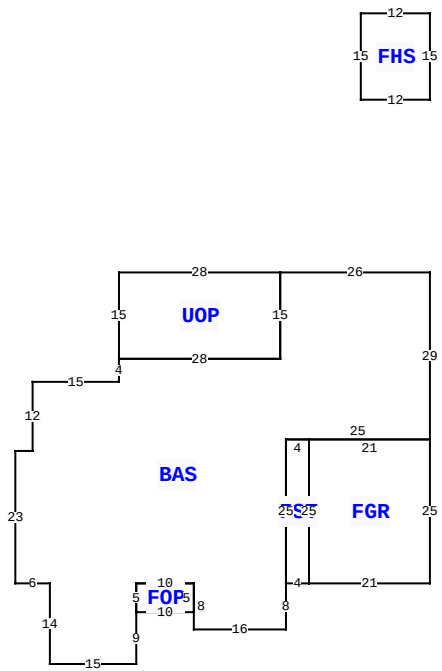

384 NW HARRIS LOOP, LAKE CITY

BLD DATE		LGL DATE	
XF DATE		LAND DATE	04/03/2025 MLU
INC DATE		AG DATE	

VALUATION SUMMARY

VALUATION BY		STANDARD
Tax Group: 2	Tax Dist:	
BUILDING MARKET VALUE		294,374
TOTAL MARKET OB/XF VALUE		7,026
TOTAL LAND VALUE - MARKET		42,000
TOTAL MARKET VALUE		343,400
SOH/AGL Deduction		8,999
ASSESSED VALUE		334,401
TOTAL EXEMPTION VALUE	HX HB	50,722
BASE TAXABLE VALUE		283,679
TOTAL JUST VALUE		343,400
NCON VALUE		0
INCOME VALUE		
PREVIOUS YEAR MKT VALUE		347,666

PERMIT NUM	DESCRIPTION	AMT	ISSUED
37789	MAINT/ALTR	90	02/25/2019
14246	SFR	435	07/08/1998

SALES DATA

OFF RECORD Number	DATE	TYPE INST	Q U	V I	RSN CD	SALE PRICE
1406/1980	2/27/2020	WD	Q	I	01	309,000
GRANTOR: LINDA F STAMPER						
GRANTEE: REGINALD DENNIS TAY						
0998/2286	10/27/2003	WD	Q	I		269,000
GRANTOR: HUBERT DEAN & EMMA L						
GRANTEE: DAVID R & LINDA G S						

BUILDING NOTES

BUILDING DIMENSIONS

BAS=[ORIG=0,0] W26 S15 W28 S4 W15 S12 W3 S23 E6 S14 E15 N9 N5 E10 S8 E16 N8 N25 E25 N29 $
FGR=[ORIG=-21,54] E21 N25 W21 S25 $
UOP=[ORIG=-26,0] W28 S15 E28 N15 $
FHS=[ORIG=0,-30] N15 W12 S15 E12 $
FST=[ORIG=-25,54] E4 N25 W4 S25 $
FOP=[ORIG=-51,59] E10 N5 W10 S5 $
PTR=[ORIG=0,0] N30 S30 $
.

EXTRA FEATURES

LN	OB/XF CODE	DESCRIPTION	BLD	CAP	L	W	UNITS	UT	Adj R	ADJ UNIT PRICE	ORIG COND	YEAR ON	YEAR ACTUAL	Q	% COND	OB/XF MKT VALUE	NOTES
1	0166	CONC,PAVMT	0	100	0	0	2,913.00	UT	2.00	2.00	100	1999	1999	3	100	5,826	
2	0190	FPLC PF	0	100	0	0	1.00	UT	1,200.00	1,200.00	100	1999	1999	3	100	1,200	

LAND DESCRIPTION

TOTAL OB/XF 7,026

LN	USE CODE	CLS	LAND USE DESCRIPTION	CAP	RD	LOC ZONE	FRONT	DEPTH	TOT LND UTS	UNIT TYPE	DT	DPTH FACT	% COND	TOT ADJ	UNIT PRICE	ADJ UNIT PRICE	LAND VALUE	OTHER ADJUSTMENTS AND NOTES	YEAR	DENSITY	DECL	FRZ	YR	CONSRV
1	0140	C	SFR GOLF	100		00	0.00	0.00	1.00	LT		1.00	1.00	1.20	35,000.00	42,000.00	42,000							

REVIEW DATE 05/25/2023 BY JB Total Acres: 0.70 Total Land Value: 42,000 Market: 0 Agricultural: 0 Common: 42,000 PRINTED 11/07/2025 BY SYS