LOT 21 FAIRWAY VIEW UNIT 2-A.
448-217, 779-639, 868-1326,
WD 1061-2538, WD 1063-2047,

JACKSON SANDRA LORETTA
354 NW HARRIS LP
LAKE CITY, FL 32055

2026

26-3S-16-02308-061

COLUMBIA COUNTY PROPERTY

BUILDING CHARACTERISTICS

ELEMENT	CD	CONSTRUCTION
Exterior Wall	19	COMMON BRK 90
Exterior Wall	05	AVERAGE 10
Roof Structur	03	GABLE/HIP 100
Roof Cover	12	MODULAR MT 100
Interior Wall	05	DRYWALL 100
Interior Floo	14	CARPET 80
Interior Floo	06	VINYL ASB 20
Air Condition	03	CENTRAL 100
Heating Type	04	AIR DUCTED 100
Bedrooms		3 100
Bathrooms		2.5 100
Frame	01	NONE 100
Stories	1.	1. 100
Architectual	05	CONV 100
Units		0 100
Condition Adj	03	03 100
Kitchen Adjus	01	01 100
Quality	07	07
DOR CODE	0100	SINGLE FAMILY
MAP NUM		MKT AREA 06
NEIGHBORHOOD/LOC	26316.030	1.00/

AREA TYPE	TOTAL GROSS AREA	PCT OF BASE	YEAR	TOT ADJ AREA	SUBAREA MARKET VALUE
BAS	2,621	100		2,621	229,499
FGR	552	55		304	26,619
FOP	56	30		17	1,489
FOP	240	30		72	6,304
FSP	240	40		96	8,406
UOP	80	20		16	1,401
TOTALS	3,789			3,126	273,717

MARKET ADJUSTMENTS

TYPE	MDL	EFF. AREA	TOT ADJ PTS	EFF. BASE RATE	REPL. COST NEW	AYB	EYB	ECON	FNCT		NORM	% COND
0100	01	3,126	120.2795	134.71	421,103	1980	1980	0	0	0	35.00	65.00

1 SINGLE FAM 100% - 2017 Heated Area: 2621 HX Base Yr 2017

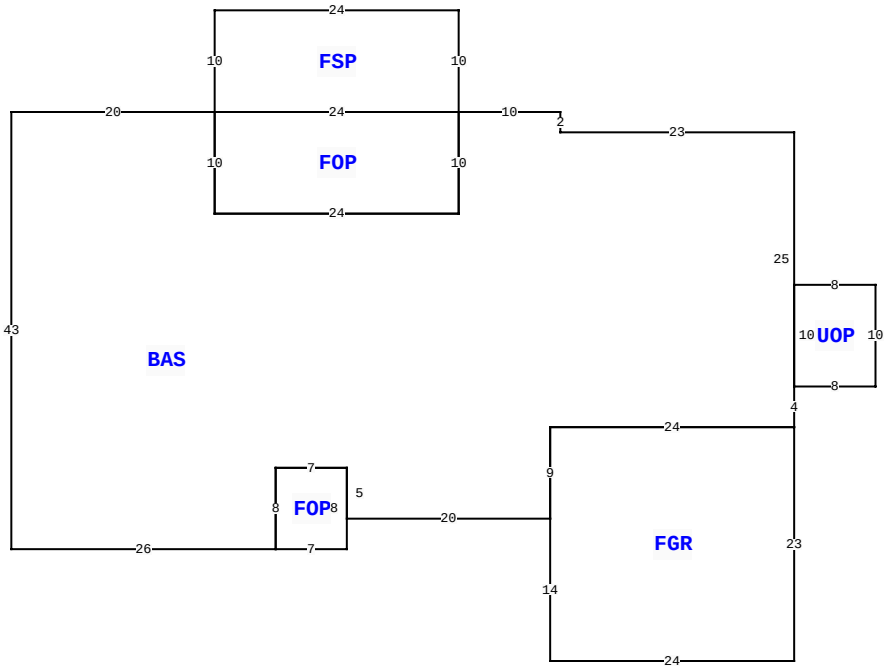

354 NW HARRIS LOOP, LAKE CITY

BLD DATE		LGL DATE	
XF DATE		LAND DATE	04/03/2025 MLU
INC DATE		AG DATE	

VALUATION SUMMARY

VALUATION BY		STANDARD
Tax Group: 2	Tax Dist:	
BUILDING MARKET VALUE		273,717
TOTAL MARKET OB/XF VALUE		5,903
TOTAL LAND VALUE - MARKET		42,000
TOTAL MARKET VALUE		321,620
SOH/AGL Deduction		134,885
ASSESSED VALUE		186,735
TOTAL EXEMPTION VALUE	HX HB	50,722
BASE TAXABLE VALUE		136,013
TOTAL JUST VALUE		321,620
NCON VALUE		0
INCOME VALUE		
PREVIOUS YEAR MKT VALUE		321,620

SALE:1:1: LOT 21 FAIRWAY VIEW UNIT 2-A

PERMIT NUM	DESCRIPTION	AMT	ISSUED
31373	MAINT/ALTR	175	08/21/2013

SALES DATA

OFF RECORD Number	DATE	TYPE INST	Q U	V I	RSN CD	SALE PRICE
1323/2012	10/04/2016	WD	Q	I	01	150,000
GRANTOR: ANDERSON COLUMBIA CO,						
GRANTEE: SANDRA LORETTA JACK						
1061/2538	10/03/2005	WD	Q	I	01	0
GRANTOR: ANDERSON COLUMBIA ENV						
GRANTEE: ANDERSON COLUMBIA C						

BUILDING NOTES

BUILDING DIMENSIONS

BAS= W23 N2 W10 FSP= N10 W24S10 E24$ FOP= W24 S10 E24 N10$ S10 W24 N10 W20 S43 E26 FOP= E7 N8 W7 S8$ N8 E7 S5 E20 FGR= S14 E24 N23 W24 S9$ N9 E24 N4 UOP= E8 N10 W8 S10$ N25$.

EXTRA FEATURES

LN	OB/XF CODE	DESCRIPTION	BLD	CAP	L	W	UNITS	UT	Adj R	ADJ UNIT PRICE	ORIG COND	YEAR ON	YEAR ACTUAL	Q	% COND	OB/XF MKT VALUE	NOTES
1	0166	CONC,PAVMT	0	100	0	0	1.00	UT	0.00	0.00	100	0	0	3	100	800	
2	0190	FPLC PF	0	100	0	0	1.00	UT	1,200.00	1,200.00	100	0	0	3	100	1,200	
3	0260	PAVEMENT-A	0	100	0	0	1.00	UT	680.00	680.00	50	0	0	3	50	340	
4	0166	CONC,PAVMT	0	100	13	85	1,105.00	UT	2.50	2.50	100	2009	2009	3	100	2,763	
5	0296	SHED METAL	0	100	13	85	1.00	UT	0.00	0.00	100	2017	2017	3	100	800	

LAND DESCRIPTION

TOTAL OB/XF 5,903

LN	USE CODE	CLS	LAND USE DESCRIPTION	CAP	RD	LOC ZONE	FRONT	DEPTH	TOT LND UTS	UNIT TYPE	DT	DPTH FACT	% COND	TOT ADJ	UNIT PRICE	ADJ UNIT PRICE	LAND VALUE	OTHER ADJUSTMENTS AND NOTES	YEAR	DENSITY	DECL	FRZ	YR	CONSRV
1	0140	C	SFR GOLF	100		00	0.00	0.00	1.00	LT		1.00	1.00	1.20	35,000.00	42,000.00	42,000							

REVIEW DATE 05/25/2023 BY JB Total Acres: 0.56 Total Land Value: 42,000 Market: 0 Agricultural: 0 Common: 42,000 PRINTED 11/07/2025 BY SYS