LOT 22 VILLAGE ON THE GREEN S/D.
ORB 627-780, 799-694

WHITAKER HOWARD M/WHITAKER ROBETA F
1482 NW FRONTIER DRIVE
LAKE CITY, FL 32055

**2026**

**26-3S-16-02307-122**

## COLUMBIA COUNTY PROPERTY



## BUILDING CHARACTERISTICS

| ELEMENT | CD | CONSTRUCTION |
|---|---|---|
| Exterior Wall | 10 | ABOVE AVG. 100 |
| Roof Structur | 08 | IRREGULAR 100 |
| Roof Cover | 03 | COMP SHNGL 100 |
| Interior Wall | 05 | DRYWALL 100 |
| Interior Floo | 14 | CARPET 90 |
| Interior Floo | 11 | CLAY TILE 10 |
| Air Condition | 03 | CENTRAL 100 |
| Heating Type | 04 | AIR DUCTED 100 |
| Bedrooms | | 3 100 |
| Bathrooms | | 3 100 |
| Frame | 01 | NONE 100 |
| Stories | 1.5 | 1.5 100 |
| Architectual | 05 | CONV 100 |
| Units | | 0 100 |
| Condition Adj | 03 | 03 100 |
| Kitchen Adjus | 01 | 01 100 |
| Quality | 07 | 07 |
| DOR CODE | 0100 | SINGLE FAMILY |
| MAP NUM | | MKT AREA 06 |
| NEIGHBORHOOD/LOC | 26316.020 | 1.00/ |

| AREA TYPE | TOTAL GROSS AREA | PCT OF BASE | YEAR | TOT ADJ AREA | SUBAREA MARKET VALUE |
|---|---|---|---|---|---|
| BAS | 3,097 | 100 | | 3,097 | 302,487 |
| FGR | 735 | 55 | | 404 | 39,459 |
| FOP | 36 | 30 | | 11 | 1,075 |
| FOP | 56 | 30 | | 17 | 1,660 |
| FSP | 1,088 | 40 | | 435 | 42,487 |
| FUS | 795 | 100 | | 795 | 77,648 |
| TOTALS | 5,807 | | | 4,759 | 464,816 |

## MARKET ADJUSTMENTS

| TYPE | MDL | EFF. AREA | TOT ADJ PTS | EFF. BASE RATE | REPL. COST NEW | AYB | EYB | ECON | FNCT | | NORM | % COND |
|---|---|---|---|---|---|---|---|---|---|---|---|---|
| 0100 | 01 | 4,759 | 124.5829 | 139.53 | 664,023 | 1995 | 1995 | 0 | 0 | 0 | 30.00 | 70.00 |

1 SINGLE FAM 100% - 1996 Heated Area: 3892 HX Base Yr 1996

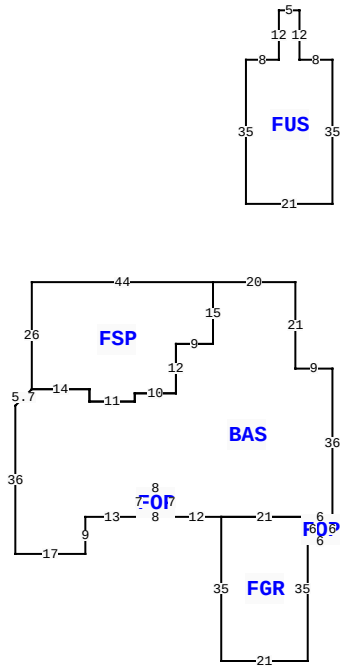


1482 NW FRONTIER DR, LAKE CITY

| | | | |
|---|---|---|---|
| BLD DATE | | LGL DATE | |
| XF DATE | | LAND DATE | 04/03/2025 MLU |
| INC DATE | | AG DATE | |

## VALUATION SUMMARY

| | | |
|---|---|---|
| VALUATION BY | | STANDARD |
| Tax Group: 2 | Tax Dist: | |
| BUILDING MARKET VALUE | | 464,816 |
| TOTAL MARKET OB/XF VALUE | | 5,549 |
| TOTAL LAND VALUE - MARKET | | 42,000 |
| TOTAL MARKET VALUE | | 512,365 |
| SOH/AGL Deduction | | 168,553 |
| ASSESSED VALUE | | 343,812 |
| TOTAL EXEMPTION VALUE | HX HB | 50,722 |
| BASE TAXABLE VALUE | | 293,090 |
| TOTAL JUST VALUE | | 512,365 |
| NCON VALUE | | 0 |
| INCOME VALUE | | |
| PREVIOUS YEAR MKT VALUE | | 519,005 |

SALE:1:1: LOT 22 VILLAGE ON THE GREEN

| PERMIT NUM | DESCRIPTION | AMT | ISSUED |
|---|---|---|---|
| 9606 | SFR | 550 | 04/17/1995 |

## SALES DATA

| OFF RECORD Number | DATE | TYPE INST | Q U | V I | RSN CD | SALE PRICE |
|---|---|---|---|---|---|---|
| 0799/0694 | 12/15/1994 | WD | Q | V | | 32,500 |
| GRANTOR: JAMES L & SUZANNE MCD | | | | | | |
| GRANTEE: HOWARD M & ROBERTA | | | | | | |
| 0627/0780 | 7/01/1987 | WD | Q | V | | 22,500 |
| GRANTOR: DAUGHTRY O P JR & | | | | | | |
| GRANTEE: MCDUFFIE JAMES L & | | | | | | |

## BUILDING NOTES

## BUILDING DIMENSIONS

BAS= W9 N21 W20 FSP= W44 S26E14 S3 E11 N2 E10 N12 E9 N15$ S15 W9 S12 W10 S2 W11 N3 W14 L4 D4 S36 E17 N9 E13 FOP= E8N7 W8 S7$ N7 E8 S7 E12 FGR= S35 E21 N35 W21$ E21 FOP= S6 E6 N6 W6$ E6 N36$ PTR= N40 FUS= N35 W8 N12 W5 S12 W8 S35E21$ S40$.

## EXTRA FEATURES

| LN | OB/XF CODE | DESCRIPTION | BLD | CAP | L | W | UNITS | UT | Adj R | ADJ UNIT PRICE | ORIG COND | YEAR ON | YEAR ACTUAL | Q | % COND | OB/XF MKT VALUE | NOTES |
|---|---|---|---|---|---|---|---|---|---|---|---|---|---|---|---|---|---|
| 1 | 0166 | CONC,PAVMT | 0 | 100 | 0 | 0 | 3,699.00 | UT | 1.50 | 1.50 | 100 | 1995 | 1995 | 3 | 100 | 5,549 | |

## LAND DESCRIPTION

TOTAL OB/XF 5,549

| LN | USE CODE | CLS | LAND USE DESCRIPTION | CAP | RD | LOC ZONE | FRONT | DEPTH | TOT LND UTS | UNIT TYPE | DT | DPTH FACT | % COND | TOT ADJ | UNIT PRICE | ADJ UNIT PRICE | LAND VALUE | OTHER ADJUSTMENTS AND NOTES | YEAR | DENSITY | DECL | FRZ | YR | CONSRV |
|---|---|---|---|---|---|---|---|---|---|---|---|---|---|---|---|---|---|---|---|---|---|---|---|---|
| 1 | 0140 | C | SFR GOLF | 100 | | RSF- | 2130.00 | 154.00 | 1.00 | LT | | 1.00 | 1.00 | 1.20 | 35,000.00 | 42,000.00 | 42,000 | | | | | | | |

REVIEW DATE 05/25/2023 BY JB Total Acres: 0.46 Total Land Value: 42,000 Market: 0 Agricultural: 0 Common: 42,000 PRINTED 11/20/2025 BY SYS