LOT 12 VILLAGE ON THE GREEN S/D.
626-512,13, 639-433, 806-505, 81

DRUMMOND JOSEPH C II
1597 NW FRONTIER DR
LAKE CITY, FL 32055-9049

2026

26-3S-16-02307-112

COLUMBIA COUNTY PROPERTY

BUILDING CHARACTERISTICS

ELEMENT	CD	CONSTRUCTION
Exterior Wall	19	COMMON BRK 100
Roof Structur	08	IRREGULAR 100
Roof Cover	14	PREFIN MT 100
Interior Wall	05	DRYWALL 100
Interior Floo	14	CARPET 80
Interior Floo	15	HARDTILE 20
Air Condition	03	CENTRAL 100
Heating Type	04	AIR DUCTED 100
Bedrooms		4 100
Bathrooms		3 100
Frame	01	NONE 100
Stories	1.5	1.5 100
Architectual	05	CONV 100
Units		0 100
Condition Adj	03	03 100
Kitchen Adjus	01	01 100
Quality	07	07
DOR CODE	0100	SINGLE FAMILY
MAP NUM		MKT AREA 06
NEIGHBORHOOD/LOC	26316.020	1.00/

AREA TYPE	TOTAL GROSS AREA	PCT OF BASE	YEAR	TOT ADJ AREA	SUBAREA MARKET VALUE
BAS	72	100		72	8,052
BAS	2,688	100		2,688	300,639
FEP	352	80		282	31,540
FGR	702	55		386	43,172
FOP	64	30		19	2,125
FUS	832	100		832	93,055
TOTALS	4,710			4,279	478,584

MARKET ADJUSTMENTS

TYPE	MDL	EFF. AREA	TOT ADJ PTS	EFF. BASE RATE	REPL. COST NEW	AYB	EYB	ECON	FNCT		NORM	% COND
0100	01	4,279	138.6993	155.34	664,700	1997	1997	0	0	0	28.00	72.00

1 SINGLE FAM 100% - 1998 Heated Area: 3592 HX Base Yr 1998

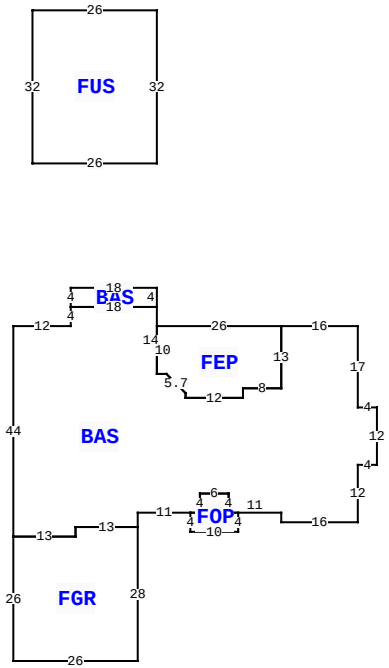

1597 NW FRONTIER DR, LAKE CITY

BLD DATE		LGL DATE	
XF DATE		LAND DATE	04/03/2025 MLU
INC DATE		AG DATE	

VALUATION SUMMARY

VALUATION BY		STANDARD
Tax Group: 2	Tax Dist:	
BUILDING MARKET VALUE		478,584
TOTAL MARKET OB/XF VALUE		11,752
TOTAL LAND VALUE - MARKET		21,000
TOTAL MARKET VALUE		511,336
SOH/AGL Deduction		181,849
ASSESSED VALUE		329,487
TOTAL EXEMPTION VALUE	HX HB	50,722
BASE TAXABLE VALUE		278,765
TOTAL JUST VALUE		511,336
NCON VALUE		0
INCOME VALUE		
PREVIOUS YEAR MKT VALUE		518,283

PERMIT NUM	DESCRIPTION	AMT	ISSUED
000042923	Roof Replacement	28,330	10/07/2021
000042458	Electrical Servic	0	08/02/2021
11811	SFR	515	10/30/1996

SALES DATA

OFF RECORD Number	DATE	TYPE INST	Q / U	V / I	RSN CD	SALE PRICE
1443/1639	7/28/2021	LE	U	I	14	100
GRANTOR: DRUMMOND JOSEPH C II						
GRANTEE: DRUMMOND JOSEPH C I						
0920/0050	1/19/2001	WD	Q	I	01	100
GRANTOR: RENE DRUMMOND						
GRANTEE: JOSEPH C DRUMMOND I						

BUILDING NOTES

BUILDING DIMENSIONS

BAS= W18 S4 W12 S44 FGR= S26E26 N28 W13 S2 W13$ E13 N2 E13N3 E11 FOP= S4 E10 N4 W2 N4 W6 S4 W2$ E2 N4 E6 S4 E11 S2 E16 N12 E4 N12 W4 N17 W16 FEP= W26 S10 E2 R4 D4 S1 E12 N2 E8 N13$ S13 W8 S2 W12 N1 U4 L4 W2 N14$ BAS= N4 W18 S4 E18$ PTR= N30 FUS= N32 W26 S32 E26$ S30$.

EXTRA FEATURES

LN	OB/XF CODE	DESCRIPTION	BLD	CAP	L	W	UNITS	UT	Adj R	ADJ UNIT PRICE	ORIG COND	YEAR ON	YEAR ACTUAL	Q	% COND	OB/XF MKT VALUE	NOTES
1	0166	CONC,PAVMT	0	100	0	0	2,368.00	UT	1.50	1.50	100	1997	1997	3	100	3,552	
2	0190	FPLC PF	0	100	0	0	1.00	UT	1,200.00	1,200.00	100	1997	1997	3	100	1,200	
3	0220	JACUZZI	0	100	0	0	1.00	UT	0.00	0.00	100	1997	1997	3	100	2,500	
4	0104	GENERATOR	0	100	0	0	1.00	UT	6,000.00	6,000.00	100	2021	2021		75	4,500	

LAND DESCRIPTION

TOTAL OB/XF 11,752

LN	USE CODE	CLS	LAND USE DESCRIPTION	CAP	RD	LOC ZONE	FRONT	DEPTH	TOT LND UTS	UNIT TYPE	DT	DPTH FACT	% COND	TOT ADJ	UNIT PRICE	ADJ UNIT PRICE	LAND VALUE	OTHER ADJUSTMENTS AND NOTES	YEAR	DENSITY	DECL	FRZ	YR	CONSRV
1	0100	C	SFR	100		RSF-	2120.00	220.00	1.00	LT		1.00	1.00	0.60	35,000.00	21,000.00	21,000							

REVIEW DATE 05/25/2023 BY JB Total Acres: 0.61 Total Land Value: 21,000 Market: 0 Agricultural: 0 Common: 21,000 PRINTED 10/10/2025 BY SYS