COMM SE COR OF NE1/4 OF SW1/4, R
TO W R/W OF CR-252, N 430.66 FT
505.74 FT, S 430.66 FT, W 743.47

SWINFORD RYAN MICHAEL/SWINFORD ANNE MOGER
576 SW KOONVILLE AVE
LAKE CITY, FL 32024

2026

26-3S-15-00269-003

COLUMBIA COUNTY PROPERTY

BUILDING CHARACTERISTICS

ELEMENT	CD	CONSTRUCTION
Exterior Wall	51	LOG 100
Roof Structur	03	GABLE/HIP 100
Roof Cover	14	PREFIN MT 100
Interior Wall	05	DRYWALL 50
Interior Wall	06	CUST PANEL 50
Interior Floo	12	HARDWOOD 80
Interior Floo	14	CARPET 20
Air Condition	03	CENTRAL 100
Heating Type	04	AIR DUCTED 100
Bedrooms		3 100
Bathrooms		2.5 100
Frame	01	NONE 100
Stories	2.	2. 100
Architectual	05	CONV 100
Units		0 100
Condition Adj	03	03 100
Kitchen Adjus	01	01 100
Quality	07	07
DOR CODE	0101	SFRES/SFRES
MAP NUM		MKT AREA 01
NEIGHBORHOOD/LOC	26315.00	1.00/

AREA TYPE	TOTAL GROSS AREA	PCT OF BASE	YEAR	TOT ADJ AREA	SUBAREA MARKET VALUE
BAS	1,140	100		1,140	121,524
FEP	44	80		35	3,731
FEP	77	80		62	6,609
FOP	471	30		141	15,031
FUS	650	100		650	69,290
UCP	576	20		115	12,259
UOP	30	20		6	640
TOTALS	2,988			2,149	229,083

MARKET ADJUSTMENTS

TYPE	MDL	EFF. AREA	TOT ADJ PTS	EFF. BASE RATE	REPL. COST NEW	AYB	EYB	ECON	FNCT		NORM	% COND
0100	01	2,149	146.4297	164.00	352,436	1990	1990	0	0	0	35.00	65.00

1 SINGLE FAM 100% - 2022 Heated Area: 1790 HX Base Yr 2022

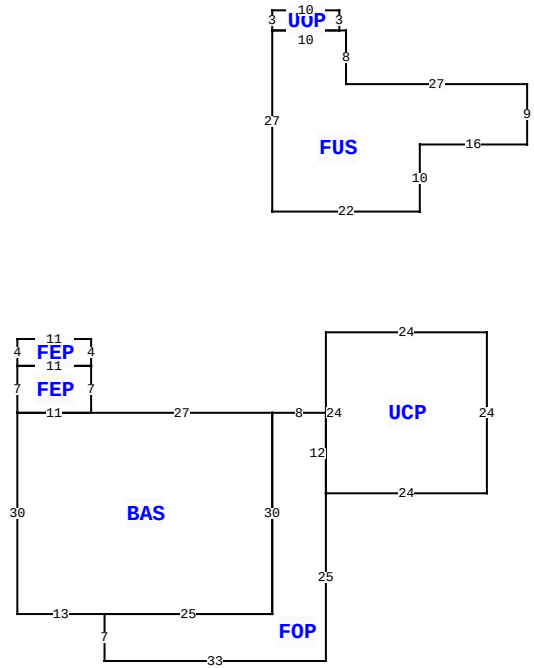

576 SW KOONVILLE AVE, LAKE CITY

BLD DATE		LGL DATE	
XF DATE		LAND DATE	04/07/2025 MLU
INC DATE		AG DATE	

VALUATION SUMMARY

VALUATION BY		STANDARD
Tax Group: 3	Tax Dist:	
BUILDING MARKET VALUE		302,897
TOTAL MARKET OB/XF VALUE		8,600
TOTAL LAND VALUE - MARKET		99,000
TOTAL MARKET VALUE		410,497
SOH/AGL Deduction		125,572
ASSESSED VALUE		284,925
TOTAL EXEMPTION VALUE	HX HB	50,722
BASE TAXABLE VALUE		234,203
TOTAL JUST VALUE		410,497
NCON VALUE		0
INCOME VALUE		
PREVIOUS YEAR MKT VALUE		415,252

LAND:7:1: MULTI-USE
LAND:6:1: MULTI USE - HX ON HOUSE
BLDG:2:1: BEACHCOMBER MH
XFOB:1:1: BEACHCOMBER M H

PERMIT NUM	DESCRIPTION	AMT	ISSUED
29039	MAINT/ALTR	60	12/01/2010

SALES DATA

OFF RECORD Number	DATE	TYPE INST	Q U	V I	RSN CD	SALE PRICE
1440/1467	6/16/2021	WD	Q	I	01	380,000
GRANTOR: TYMESON DIANNE L						
GRANTEE: SWINFORD RYAN MICHA						
1320/2520	8/22/2016	WD	Q	I	01	279,000
GRANTOR: ELSIE JANE JOHNSON (A						
GRANTEE: BRUCE B SR & DIANNE						

BUILDING NOTES

BUILDING DIMENSIONS

BAS=[ORIG=0,0] W27 W11 S30 E13 E25 N30 $
FUS=[ORIG=0,-30] N27 E11 S8 E27 S9 W16 S10 W22 $
UCP=[ORIG=8,12] E24 N24 W24 S24 $
FOP=[ORIG=-25,30] S7 E33 N25 N12 W8 S30 W25 $
FEP=[ORIG=-27,0] N7 W11 S7 E11 $
FEP=[ORIG=-27,-7] N4 W11 S4 E11 $
UOP=[ORIG=0,-57] N3 E10 S3 W10 $
.

EXTRA FEATURES

LN	OB/XF CODE	DESCRIPTION	BLD	CAP	L	W	UNITS	UT	Adj R	ADJ UNIT PRICE	ORIG COND	YEAR ON	YEAR ACTUAL	Q	% COND	OB/XF MKT VALUE	NOTES
1	0021	BARN,FR AE	0	100	0	0	1.00	UT	2,000.00	2,000.00	50	0	0	3	50	1,000	
2	0040	BARN,POLE	0	100	0	0	1.00	UT	0.00	0.00	100	1996	1996	3	100	400	
3	0294	SHED WOOD/	0	100	0	0	1.00	UT	0.00	0.00	100	2016	2016	3	100	800	
4	9947	Septic	0	100	0	0	1.00	UT	3,000.00	3,000.00	100			3	100	3,000	
5	0294	SHED WOOD/	0	100	0	0	1.00	UT	0.00	0.00	100	2016	2016	3	100	400	
6	9947	Septic	0	0	0	0	1.00	UT	3,000.00	3,000.00	100			3	100	3,000	

LAND DESCRIPTION

TOTAL OB/XF 8,600

LN	USE CODE	CLS	LAND USE DESCRIPTION	CAP	RD	LOC ZONE	FRONT	DEPTH	TOT LND UTS	UNIT TYPE	DT	DPTH FACT	% COND	TOT ADJ	UNIT PRICE	ADJ UNIT PRICE	LAND VALUE	OTHER ADJUSTMENTS AND NOTES	YEAR	DENSITY	DECL	FRZ	YR	CONSRV
1	0100	C	SFR	0		A-1	0.00	0.00	1.00	AC		1.00	1.00	1.00	9,000.00	9,000.00	9,000							
2	0100	C	SFR	100		A-1	0.00	0.00	10.00	AC		1.00	1.00	1.00	9,000.00	9,000.00	90,000							

REVIEW DATE 02/23/2023 BY KS Total Acres: 11.00 Total Land Value: 99,000 Market: 0 Agricultural: 0 Common: 99,000 PRINTED 10/03/2025 BY SYS

COMM SE COR OF NE1/4 OF SW1/4, R
TO W R/W OF CR-252, N 430.66 FT
505.74 FT, S 430.66 FT, W 743.47

SWINFORD RYAN MICHAEL/SWINFORD ANNE MOGER
576 SW KOONVILLE AVE
LAKE CITY, FL 32024

2026

26-3S-15-00269-003

COLUMBIA COUNTY PROPERTY

BUILDING CHARACTERISTICS

ELEMENT	CD	CONSTRUCTION
Exterior Wall	05	AVERAGE 100
Roof Structur	03	GABLE/HIP 100
Roof Cover	03	COMP SHNGL 100
Interior Wall	05	DRYWALL 100
Interior Floo	14	CARPET 90
Interior Floo	08	SHT VINYL 10
Air Condition	03	CENTRAL 100
Heating Type	04	AIR DUCTED 100
Bedrooms		3 100
Bathrooms		2 100
Frame	01	NONE 100
Stories	1.	1. 100
Architectual	05	CONV 100
Units		0 100
Quality	05	05
DOR CODE	0101	SFRES/SFRES
MAP NUM		MKT AREA 01
NEIGHBORHOOD/LOC	26315.00	1.00/

AREA TYPE	TOTAL GROSS AREA	PCT OF BASE	YEAR	TOT ADJ AREA	SUBAREA MARKET VALUE
BAS	744	100		744	70,498
FOP	42	30		13	1,232
FOP	72	30		22	2,084
TOTALS	858			779	73,814

MARKET ADJUSTMENTS

TYPE	MDL	EFF. AREA	TOT ADJ PTS	EFF. BASE RATE	REPL. COST NEW	AYB	EYB	ECON	FNCT		NORM	% COND
0100	01	779	112.8000	126.34	98,419	2005	2005	0	0	0	25.00	75.00

4 SINGLE FAM 0% - 2022 Heated Area: 744 HX Base Yr 2022

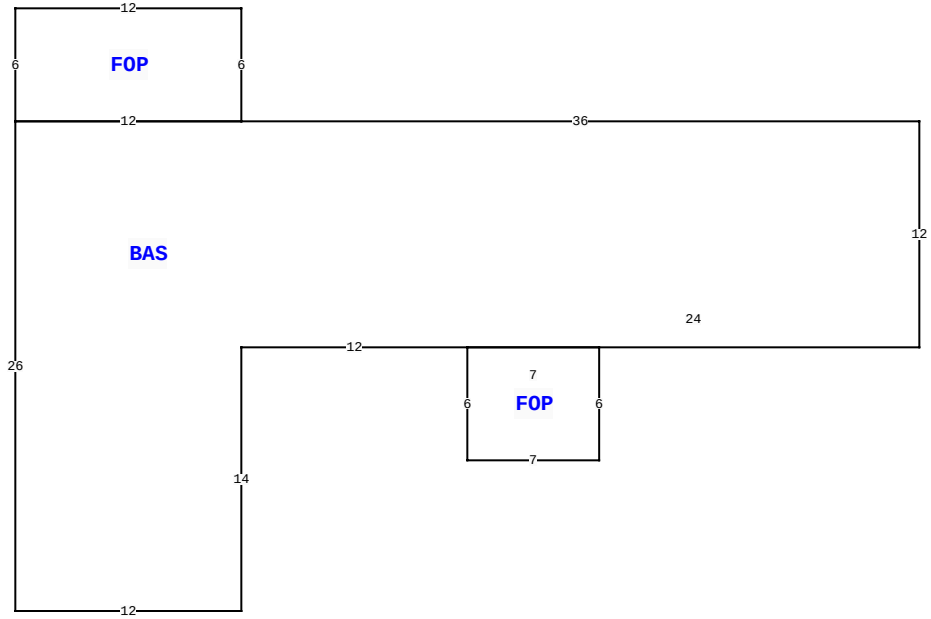

576 SW KOONVILLE AVE, LAKE CITY

BLD DATE		LGL DATE	
XF DATE		LAND DATE	04/07/2025 MLU
INC DATE		AG DATE	

VALUATION SUMMARY

VALUATION BY		STANDARD
Tax Group: 3	Tax Dist:	
BUILDING MARKET VALUE		302,897
TOTAL MARKET OB/XF VALUE		8,600
TOTAL LAND VALUE - MARKET		99,000
TOTAL MARKET VALUE		410,497
SOH/AGL Deduction		125,572
ASSESSED VALUE		284,925
TOTAL EXEMPTION VALUE	HX HB	50,722
BASE TAXABLE VALUE		234,203
TOTAL JUST VALUE		410,497
NCON VALUE		0
INCOME VALUE		
PREVIOUS YEAR MKT VALUE		415,252

PERMIT NUM	DESCRIPTION	AMT	ISSUED

SALES DATA

OFF RECORD Number	DATE	TYPE INST	Q / U	V / I	RSN CD	SALE PRICE
1440/1467	6/16/2021	WD	Q	I	01	380,000
GRANTOR: TYMESON DIANNE L						
GRANTEE: SWINFORD RYAN MICHA						
1320/2520	8/22/2016	WD	Q	I	01	279,000
GRANTOR: ELSIE JANE JOHNSON (A						
GRANTEE: BRUCE B SR & DIANNE						

BUILDING NOTES

BUILDING DIMENSIONS

BAS= W36 FOP= N6 W12 S6 E12$ W12 S26 E12 N14 E12 FOP= S6 E7 N6 W7$ E24 N12$.

EXTRA FEATURES

L N	OB/XF CODE	DESCRIPTION	BLD	CAP	L	W	UNITS	UT	Adj R	ADJ UNIT PRICE	ORIG COND	YEAR ON	YEAR ACTUAL	Q	% COND	OB/XF MKT VALUE	NOTES

LAND DESCRIPTION

TOTAL OB/XF 0

L N	USE CODE	CLS	LAND USE DESCRIPTION	CAP	R D	LOC ZONE	FRONT	DEPTH	TOT LND UTS	UNIT TYPE	D T	DPTH FACT	% COND	TOT ADJ	UNIT PRICE	ADJ UNIT PRICE	LAND VALUE	OTHER ADJUSTMENTS AND NOTES	YEAR	DENSITY	DECL	FRZ	YR	CONSRV

REVIEW DATE 02/23/2023 BY KS Total Acres: 11.00 Total Land Value: 99,000 Market: 0 Agricultural: 0 Common: 99,000 PRINTED 10/03/2025 BY SYS