COMM NW COR OF SE1/4 OF NW1/4, R
FT FOR POB, S 39 DEG E 411.79 FT
199.32 FT, E 342.44 FT W R/W CR

THOMAS FREDERICK L/THOMAS AUDREY M
225 SW COZY GLN
LAKE CITY, FL 32024

2026

26-3S-15-00230-004

COLUMBIA COUNTY PROPERTY

BUILDING CHARACTERISTICS

ELEMENT	CD	CONSTRUCTION
Exterior Wall	19	COMMON BRK 100
Roof Structur	08	IRREGULAR 100
Roof Cover	12	MODULAR MT 100
Interior Wall	05	DRYWALL 100
Interior Floo	15	HARDTILE 80
Interior Floo	12	HARDWOOD 20
Air Condition	03	CENTRAL 100
Heating Type	04	AIR DUCTED 100
Bedrooms		3 100
Bathrooms		2 100
Frame	02	WOOD FRAME 100
Stories	1.	1. 100
Architectual	05	CONV 100
Units		0 100
Quality	07	07

DOR CODE 0100 SINGLE FAMILY
MAP NUM | MKT AREA 01
NEIGHBORHOOD/LOC 26315.00 1.00/

AREA TYPE	TOTAL GROSS AREA	PCT OF BASE	YEAR	TOT ADJ AREA	SUBAREA MARKET VALUE
BAS	1,904	100		1,904	242,310
FGR	529	55		291	37,034
FOP	24	30		7	891
FOP	320	30		96	12,218
FUS	180	100		180	22,907
TOTALS	2,957			2,478	315,360

MARKET ADJUSTMENTS

TYPE	MDL	EFF. AREA	TOT ADJ PTS	EFF. BASE RATE	REPL. COST NEW	AYB	EYB	ECON	FNCT		NORM	% COND
0100	01	2,478	136.9060	153.33	379,952	2008	2008	0	0	0	17.00	83.00

2 SINGLE FAM 100% - 2022 Heated Area: 2084 HX Base Yr 2022

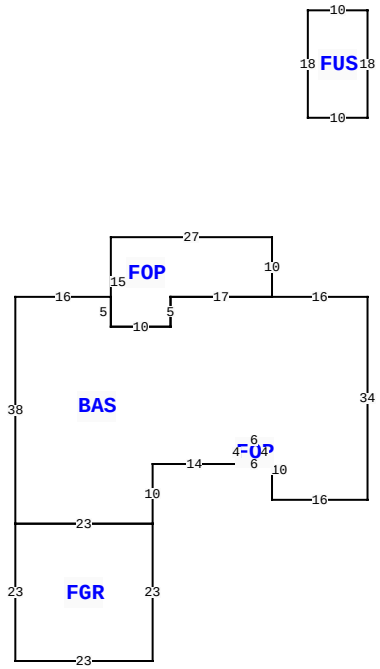

225 SW COZY GLN, LAKE CITY

BLD DATE		LGL DATE	
XF DATE		LAND DATE	04/07/2025 MLU
INC DATE		AG DATE	

VALUATION SUMMARY

VALUATION BY		STANDARD
Tax Group: 3	Tax Dist:	
BUILDING MARKET VALUE		315,360
TOTAL MARKET OB/XF VALUE		6,051
TOTAL LAND VALUE - MARKET		55,000
TOTAL MARKET VALUE		376,411
SOH/AGL Deduction		84,192
ASSESSED VALUE		292,219
TOTAL EXEMPTION VALUE	HX HB	50,722
BASE TAXABLE VALUE		241,497
TOTAL JUST VALUE		376,411
NCON VALUE		0
INCOME VALUE		
PREVIOUS YEAR MKT VALUE		380,211

PERMIT NUM	DESCRIPTION	AMT	ISSUED
000051516	Roof Replacement	22,300	11/14/2024
27237	M H	325	08/05/2008
26303	SFR	541	10/01/2007

SALES DATA

OFF RECORD Number	DATE	TYPE INST	Q U	V I	RSN CD	SALE PRICE
1430/794	2/11/2021	QC	U	I	11	100
GRANTOR: THOMAS FREDERICK L						
GRANTEE: CAMPBELL JOSH						
1430/796	2/04/2021	WD	U	I	11	100
GRANTOR: CAMPBELL JOSH						
GRANTEE: THOMAS FREDERICK L						

BUILDING NOTES

BUILDING DIMENSIONS

BAS=[ORIG=0,0] W16 W17 S5 W10 N5 W16 S38 E23 N10 E14 N4 E6 S10 E16 N34 $
FGR=[ORIG=-59,38] S23 E23 N23 W23 $
FOP=[ORIG=-16,0] N10 W27 S15 E10 N5 E17 $
FUS=[ORIG=0,-30] N18 W10 S18 E10 $
FOP=[ORIG=-22,28] E6 N4 W6 S4 $.

EXTRA FEATURES

LN	OB/XF CODE	DESCRIPTION	BLD	CAP	L	W	UNITS	UT	Adj R	ADJ UNIT PRICE	ORIG COND	YEAR ON	YEAR ACTUAL	Q	% COND	OB/XF MKT VALUE	NOTES
1	0166	CONC,PAVMT	0	100	0	0	1,417.00	UT	3.00	3.00	100	2008	2008	3	100	4,251	
2	0296	SHED METAL	0	100	0	0	1.00	UT	1,800.00	1,800.00	100	2023	2022		100	1,800	

LAND DESCRIPTION

TOTAL OB/XF 6,051

LN	USE CODE	CLS	LAND USE DESCRIPTION	CAP	RD	LOC ZONE	FRONT	DEPTH	TOT LND UTS	UNIT TYPE	DT	DPTH FACT	% COND	TOT ADJ	UNIT PRICE	ADJ UNIT PRICE	LAND VALUE	OTHER ADJUSTMENTS AND NOTES	YEAR	DENSITY	DECL	FRZ	YR	CONSRV
1	0100	C	SFR	100		A-1	0.00	0.00	5.00	AC		1.00	1.00	1.00	11,000.00	11,000.00	55,000							

REVIEW DATE 12/16/2024 BY JS Total Acres: 5.00 Total Land Value: 55,000 Market: 0 Agricultural: 0 Common: 55,000 PRINTED 09/30/2025 BY SYS