LOT 6 OAK RIDGE ESTATES UNIT 3
691-807, 735-916, WD 1022-114, W

MORGAN DAVID HAMILTON/MORGAN PAMELA ONEITA
988 SW RIDGE ST
LAKE CITY, FL 32024

2026

25-4S-16-03155-106

COLUMBIA COUNTY PROPERTY

BUILDING CHARACTERISTICS

ELEMENT	CD	CONSTRUCTION
Exterior Wall	19	COMMON BRK 100
Roof Structur	08	IRREGULAR 100
Roof Cover	03	COMP SHNGL 100
Interior Wall	05	DRYWALL 100
Interior Floo	14	CARPET 50
Interior Floo	15	HARDTILE 50
Air Condition	03	CENTRAL 100
Heating Type	04	AIR DUCTED 100
Bedrooms		4 100
Bathrooms		3 100
Frame	01	NONE 100
Stories	1.	1. 100
Architectual	05	CONV 100
Units		0 100
Condition Adj	03	03 100
Kitchen Adjus	01	01 100
Quality	07	07
DOR CODE	0100	SINGLE FAMILY
MAP NUM		MKT AREA 01
NEIGHBORHOOD/LOC	25416.030	1.00/

AREA TYPE	TOTAL GROSS AREA	PCT OF BASE	YEAR	TOT ADJ AREA	SUBAREA MARKET VALUE
BAS	728	100		728	71,558
BAS	3,216	100		3,216	316,114
FCP	770	25		192	18,873
FDU	256	60		154	15,138
FOP	32	30		10	983
FOP	160	30		48	4,718
FOP	224	30		67	6,586
FST	315	55		173	17,005
TOTALS	5,701			4,588	450,973

MARKET ADJUSTMENTS

TYPE	MDL	EFF. AREA	TOT ADJ PTS	EFF. BASE RATE	REPL. COST NEW	AYB	EYB	ECON	FNCT		NORM	% COND
0100	01	4,588	125.3725	140.42	644,247	1989	1995	0	0	0	30.00	70.00

1 SINGLE FAM 0% - 2024 Heated Area: 3944 HX Base Yr

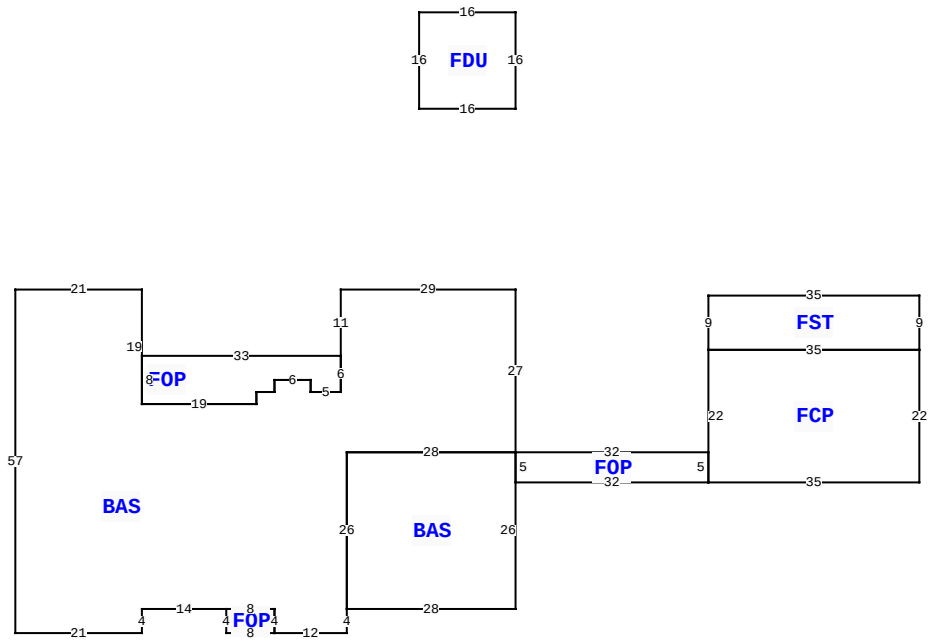

988 SW RIDGE ST, LAKE CITY

BLD DATE		LGL DATE	
XF DATE		LAND DATE	04/20/2022 MLU
INC DATE		AG DATE	

COLUMBIA COUNTY PROPERTY — VALUATION SUMMARY

VALUATION BY	STANDARD
Tax Group: 2	Tax Dist:
BUILDING MARKET VALUE	450,973
TOTAL MARKET OB/XF VALUE	58,126
TOTAL LAND VALUE - MARKET	60,000
TOTAL MARKET VALUE	569,099
SOH/AGL Deduction	0
ASSESSED VALUE	569,099
TOTAL EXEMPTION VALUE	0
BASE TAXABLE VALUE	569,099
TOTAL JUST VALUE	569,099
NCON VALUE	0
INCOME VALUE	
PREVIOUS YEAR MKT VALUE	576,615

SALE:2:1: LOT 6 OAK RIDGE ESTATES (4.01 AC)
SALE:1:1: LOT 6, OAK RIDGE ESTATE UNIT III
LAND:1:1: 4.01 ACS..

PERMIT NUM	DESCRIPTION	AMT	ISSUED
000042444	Roof Replacement	33,493	07/29/2021
37496	POOL ENCL	169	11/30/2018
25800	MAINT/ALTR	325	05/10/2007

SALES DATA

OFF RECORD Number	DATE	TYPE INST	Q U	V I	RSN CD	SALE PRICE
1492/1934	6/12/2023	WD	Q	I	01	669,900
GRANTOR: ROBINSON CALVIN B JR						
GRANTEE: MORGAN DAVID HAMILT						
1376/0461	1/04/2019	QC	U	I	11	100
GRANTOR: CALVIN B JR & ANITA L						
GRANTEE: CALVIN B JR & ANITA						

BUILDING NOTES

BUILDING DIMENSIONS

BAS= W29 S11 FOP= W33 S8 E19N2 E3 N2 E6 S2 E5 N6$ S6 W5 N2W6 S2 W3 S2 W19 N19 W21 S57 E21 N4 E14 FOP= S4 E8 N4 W8 $ E8 S4 E12 N4 BAS= E28 N26 W28 S26$ N26 E28 FOP= S5 E32 FCP= E35 N22 FST= N9 W35 S9 E35$ W35 S22$ N5 W32$ N27$ PTR=N30 FDU= N16 W16 S16 E16$ S30$.

EXTRA FEATURES

LN	OB/XF CODE	DESCRIPTION	BLD	CAP	L	W	UNITS	UT	Adj R	ADJ UNIT PRICE	ORIG COND	YEAR ON	YEAR ACTUAL	Q	% COND	OB/XF MKT VALUE	NOTES
1	0180	FPLC 1STRY	0	0	0	0	1.00	UT	2,000.00	2,000.00	100	0	0	3	100	2,000	
2	0166	CONC,PAVMT	0	0	20	30	1.00	UT	0.00	0.00	100	0	0	3	100	800	
3	0280	POOL R/CON	0	0	16	32	512.00	UT	140.00	140.00	100	1992	1992	3	40	28,672	
4	0166	CONC,PAVMT	0	0	14	140	1,960.00	UT	2.00	2.00	100	1993	1993	3	100	3,920	
5	0120	CLFENCE 4	0	0	0	0	250.00	UT	4.50	4.50	100	1993	1993	3	100	1,125	
6	0294	SHED WOOD/	0	0	10	16	160.00	UT	7.50	7.50	100	1993	1993	3	100	1,200	
7	0282	POOL ENCL	0	0	31	77	2,387.00	UT	15.00	15.00	100	2017	2017	3	57	20,409	

LAND DESCRIPTION

TOTAL OB/XF 58,126

LN	USE CODE	CLS	LAND USE DESCRIPTION	CAP	RD	LOC ZONE	FRONT	DEPTH	TOT LND UTS	UNIT TYPE	DT	DPTH FACT	% COND	TOT ADJ	UNIT PRICE	ADJ UNIT PRICE	LAND VALUE	OTHER ADJUSTMENTS AND NOTES	YEAR	DENSITY	DECL	FRZ	YR	CONSRV
1	0100	C	SFR	0		A-1	0.00	0.00	1.00	LT		1.00	1.00	1.00	60,000.00	60,000.00	60,000							

REVIEW DATE 10/02/2023 BY TP Total Acres: 4.06 Total Land Value: 60,000 Market: 0 Agricultural: 0 Common: 60,000 PRINTED 11/18/2025 BY SYS