LOT 5 HICKORY COVE.
WD 1157-149, WD 1240-45, WD 1241

WARD ASHLEY S JR
187 SW ASHEVILLE WAY
LAKE CITY, FL 32024

2026

25-4S-16-03124-105

COLUMBIA COUNTY PROPERTY

BUILDING CHARACTERISTICS

ELEMENT	CD	CONSTRUCTION
Exterior Wall	32	HARDIE BRD 80
Exterior Wall	19	COMMON BRK 20
Roof Structur	08	IRREGULAR 100
Roof Cover	03	COMP SHNGL 100
Interior Wall	05	DRYWALL 100
Interior Floo	14	CARPET 80
Interior Floo	08	SHT VINYL 20
Air Condition	03	CENTRAL 100
Heating Type	04	AIR DUCTED 100
Bedrooms		3 100
Bathrooms		2 100
Frame	02	WOOD FRAME 100
Stories	1.	1. 100
Architectual	05	CONV 100
Units		0 100
Quality	07	07
DOR CODE	0100	SINGLE FAMILY
MAP NUM		MKT AREA 06
NEIGHBORHOOD/LOC	25416.00	1.00/

AREA TYPE	TOTAL GROSS AREA	PCT OF BASE	YEAR	TOT ADJ AREA	SUBAREA MARKET VALUE
BAS	1,619	100		1,619	193,096
FGR	484	55		266	31,725
FOP	148	30		44	5,248
FOP	150	30		45	5,367
FUS	231	100		231	27,551
TOTALS	2,632			2,205	262,986

MARKET ADJUSTMENTS

TYPE	MDL	EFF. AREA	TOT ADJ PTS	EFF. BASE RATE	REPL. COST NEW	AYB	EYB	ECON	FNCT		NORM	% COND
0100	01	2,205	122.4036	137.09	302,283	2012	2012	0	0	0	13.00	87.00

1 SINGLE FAM 100% - 2013 Heated Area: 1850 HX Base Yr 2013

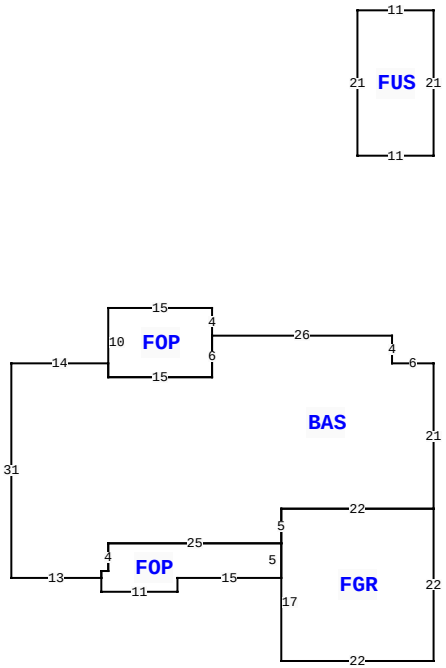

187 SW ASHEVILLE WAY, LAKE CITY

BLD DATE		LGL DATE	
XF DATE		LAND DATE	04/21/2023 MLU
INC DATE		AG DATE	

VALUATION SUMMARY

VALUATION BY		STANDARD
Tax Group: 2	Tax Dist:	
BUILDING MARKET VALUE		262,986
TOTAL MARKET OB/XF VALUE		1,772
TOTAL LAND VALUE - MARKET		18,500
TOTAL MARKET VALUE		283,258
SOH/AGL Deduction		91,112
ASSESSED VALUE		192,146
TOTAL EXEMPTION VALUE	HX HB	50,722
BASE TAXABLE VALUE		141,424
TOTAL JUST VALUE		283,258
NCON VALUE		0
INCOME VALUE		
PREVIOUS YEAR MKT VALUE		286,281

PERMIT NUM	DESCRIPTION	AMT	ISSUED
000053255	Roof Replacement	16,000	05/29/2025
29843	SFR	761	12/22/2011

SALES DATA

OFF RECORD Number	DATE	TYPE INST	Q U	V I	RSN CD	SALE PRICE
1289/1396	2/12/2015	WD	U	I	11	100
GRANTOR: MIRANDA K WARD						
GRANTEE: ASHLEY SCOTT WARD J						
1241/2293	9/20/2012	WD	Q	I	03	190,000
GRANTOR: STANLEY & MARY ANN CR						
GRANTEE: ASHLEY S JR & MIRAN						

BUILDING NOTES

BUILDING DIMENSIONS

BAS= W6 N4 W26 FOP= N4 W15 S10 E15 N6$ S6 W15 N2 W14 S31 E13 FOP= S2 E11 N2 E15 N5 W25 S4 W1 S1$ N1 E1 N4 E25 FGR= S17 E22 N22 W22 S5$ N5 E22 N21$ PTR= N30 FUS= N21 W11 S21 E11$ S30$.

EXTRA FEATURES

LN	OB/XF CODE	DESCRIPTION	BLD	CAP	L	W	UNITS	UT	Adj R	ADJ UNIT PRICE	ORIG COND	YEAR ON	YEAR ACTUAL	Q	% COND	OB/XF MKT VALUE	NOTES
1	0166	CONC,PAVMT	0	100	0	0	886.00	UT	2.00	2.00	100	2012	2012	3	100	1,772	

LAND DESCRIPTION

TOTAL OB/XF 1,772

LN	USE CODE	CLS	LAND USE DESCRIPTION	CAP	RD	LOC ZONE	FRONT	DEPTH	TOT LND UTS	UNIT TYPE	DT	DPTH FACT	% COND	TOT ADJ	UNIT PRICE	ADJ UNIT PRICE	LAND VALUE	OTHER ADJUSTMENTS AND NOTES	YEAR	DENSITY	DECL	FRZ	YR	CONSRV
1	0100	C	SFR	100		RSF-1	0.00	0.00	1.00	LT		1.00	1.00	1.00	18,500.00	18,500.00	18,500							

REVIEW DATE 07/21/2025 BY chuck Total Acres: 0.34 Total Land Value: 18,500 Market: 0 Agricultural: 0 Common: 18,500 PRINTED 11/18/2025 BY SYS