LOT 2 BLOCK B PICCADILLY PARK
SOUTH S/D. ORB 630-730,
777-315, 793-1906, 793-1907

SMITH TIMOTHY BLAIR/SMITH ELIZABETH ANN
844 SW COUNTY ROAD 242
LAKE CITY, FL 32024-7813

2026

25-4S-16-03121-008

COLUMBIA COUNTY PROPERTY

BUILDING CHARACTERISTICS

ELEMENT	CD	CONSTRUCTION
Exterior Wall	05	AVERAGE 50
Exterior Wall	19	COMMON BRK 50
Roof Structur	03	GABLE/HIP 100
Roof Cover	03	COMP SHNGL 100
Interior Wall	05	DRYWALL 100
Interior Floo	14	CARPET 90
Interior Floo	06	VINYL ASB 10
Air Condition	03	CENTRAL 100
Heating Type	04	AIR DUCTED 100
Bedrooms		3 100
Bathrooms		3 100
Frame	01	NONE 100
Stories	1.5	1.5 100
Architectual	05	CONV 100
Units		0 100
Condition Adj	03	03 100
Kitchen Adjus	01	01 100
Quality	06	06
DOR CODE	0100	SINGLE FAMILY
MAP NUM		MKT AREA 06
NEIGHBORHOOD/LOC	25416.020	1.00/

AREA TYPE	TOTAL GROSS AREA	PCT OF BASE	YEAR	TOT ADJ AREA	SUBAREA MARKET VALUE
BAS	1,422	100		1,422	119,272
FGR	676	55		372	31,202
FUS	1,170	100		1,170	98,135
UOP	70	20		14	1,175
UOP	120	20		24	2,013
UOP	312	20		62	5,200
TOTALS	3,770			3,064	256,996

MARKET ADJUSTMENTS

TYPE	MDL	EFF. AREA	TOT ADJ PTS	EFF. BASE RATE	REPL. COST NEW	AYB	EYB	ECON	FNCT		NORM	% COND
0100	01	3,064	115.2112	129.04	395,379	1987	1987	0	0	0	35.00	65.00

1 SINGLE FAM 100% - 1995 Heated Area: 2592 HX Base Yr 1995

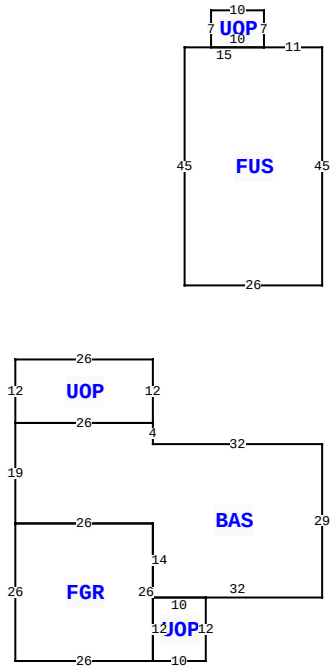

844 SW COUNTY ROAD 242 , LAKE CITY

BLD DATE		LGL DATE	
XF DATE		LAND DATE	04/21/2023 MLU
INC DATE		AG DATE	

VALUATION SUMMARY

VALUATION BY		STANDARD
Tax Group: 2	Tax Dist:	
BUILDING MARKET VALUE		256,996
TOTAL MARKET OB/XF VALUE		7,754
TOTAL LAND VALUE - MARKET		18,500
TOTAL MARKET VALUE		283,250
SOH/AGL Deduction		110,479
ASSESSED VALUE		172,771
TOTAL EXEMPTION VALUE	HX HB	50,722
BASE TAXABLE VALUE		122,049
TOTAL JUST VALUE		283,250
NCON VALUE		0
INCOME VALUE		
PREVIOUS YEAR MKT VALUE		283,250

SALE:2:1: 1/2 INTEREST (SEE ORB 793-1906)

SALE:1:1: 1/2 INTEREST (SEE ORB 793-1907)

LAND:1:1: 0.59 AC.

PERMIT NUM	DESCRIPTION	AMT	ISSUED

SALES DATA

OFF RECORD Number	DATE	TYPE INST	Q U /	V I /	RSN CD	SALE PRICE
0793/1906	7/25/1994	WD	Q	I		51,000
GRANTOR: HARRELL C MURRAY III						
GRANTEE: TIMOTHY BLAIR & ELI						
0793/1907	7/20/1994	WD	Q	I		51,000
GRANTOR: ANNE F MURRAY						
GRANTEE: TIMOTHY BLAIR & ELI						

BUILDING NOTES

BUILDING DIMENSIONS

BAS= W32 N4 UOP= N12 W26 S12E26$ W26 S19 FGR= S26 E26 N26W26$E26 S14 UOP= S12 E10 N12 W10$ E32 N29$ PTR=N30 FUS= N45 W11 UOP= N7 W10 S7 E10$ W15 S45 E26$ S30$.

EXTRA FEATURES

LN	OB/XF CODE	DESCRIPTION	BLD	CAP	L	W	UNITS	UT	Adj R	ADJ UNIT PRICE	ORIG COND	YEAR ON	YEAR ACTUAL	Q	% COND	OB/XF MKT VALUE	NOTES
1	0180	FPLC 1STRY	0	100	0	0	1.00	UT	2,000.00	2,000.00	100	0	0	3	100	2,000	
2	0294	SHED WOOD/	0	100	12	18	216.00	UT	7.50	7.50	100	1993	1993	3	100	1,620	
3	0166	CONC,PAVMT	0	100	0	0	1.00	UT	5,512.00	5,512.00	75	1993	1993	3	75	4,134	

LAND DESCRIPTION

TOTAL OB/XF 7,754

LN	USE CODE	CLS	LAND USE DESCRIPTION	CAP	RD	LOC ZONE	FRONT	DEPTH	TOT LND UTS	UNIT TYPE	DT	DPTH FACT	% COND	TOT ADJ	UNIT PRICE	ADJ UNIT PRICE	LAND VALUE	OTHER ADJUSTMENTS AND NOTES	YEAR	DENSITY	DECL	FRZ	YR	CONSRV
1	0100	C	SFR	100		RSF-	150.00	170.00	1.00	LT		1.00	1.00	1.00	18,500.00	18,500.00	18,500							

REVIEW DATE 07/07/2019 BY BC Total Acres: 0.59 Total Land Value: 18,500 Market: 0 Agricultural: 0 Common: 18,500 PRINTED 11/19/2025 BY SYS